Product Portfolio

Sample-01

info@everbestplayc.com
www.everbestplay.com

Contents

1. Section 1: Product Basic Information
1.1.Product Images----4
1.2.Brief Introduction----5
1.2.Manufacturer Information----5
1.2.Importer Information----5
1.3.Product Description ----6
1.3.Definition of Materials----6
1.4.Module Distribution Map ----7
1.5.Module List ----8
1.6.Nameplate and its application----9
2. Section 2: General Drawings
2.2.Ground plan----11
2.3.Safety Area----12
2.4.Dimension----13
2.5.Falling height----14
2.6.Post and Platform Distribution Map----15
3. Section 3: Module Installation
3.2. Platform----17
3.3. Catcher----18
3.4. Clamp----19
3.5. Metal ladder----20
3.6. 900 Spring climbing----21
3.7. 900 Curve climbing----22
3.8. 7 Shape handrail----23
3.9. Scale square roof----24
3.10. 940 Single slide panel----25
3.11. 940 Single slide----26
3.12. Vein Panel----27
3.13. 760-H600 Straight slide----28
4. Section 4: Technical Drawings
4.2. Platform----30
4.3. Metal ladder----31
4.4. 900 Spring climbing----32
4.5. 900 Curve climbing----33
4.6. 7 Shape handrail----34
4.7. Scale square roof----35
4.8. 940 Single slide panel----36
4.9. 940 Single slide----37
4.10. Vein Panel----38
4.11. 760-H600 Straight slide----39
4.12. Fixed top ftting----40
4.13. Climbing handrail----41
4.14. Single slide anchor----42
4.15. 114 Foot plate----43
4.16. Post anchor----44
4.17. Plastic foot plate----45
5. Section 5: Foundations
5.2.Fixing posts onto the Ground----47
5.3.Fixing Elements onto the Ground----48
6. Technical information
6.2.Installation Instructions----50
6.3.Product Basic Information----51
6.4.Attention----52
6.5.Product Maintenance----53
6.6.Product Storage Information----54
6.7.Product Obsolescence----54

Section 1

Product Basic Information

Sample-01

info@everbestplayc.com
www.everbestplay.com

Product Images

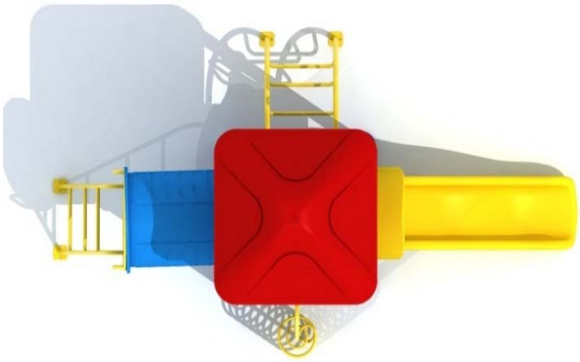

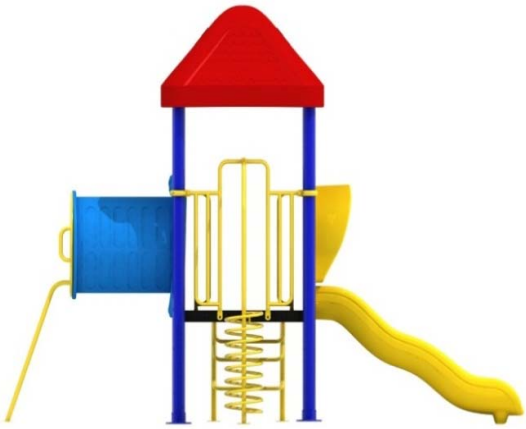

Brief Introduction

It is our philosophy to respect traditional children's play equipment and allow them to benefit from playing. It is our ultimate goal to promote physical fitness, and to enhance social skills and cognitive development in children everywhere. We used positive research results as the basis for our product development. We are confident that our products can help in the all-around development of children of different cultures, ages and abilities. Let your children grow up while learning to play. With the perfect blend of risk and safety, children love to play and learn motor and social skills with this kind of playground equipment.
The purpose of playing is to allow children to simulate the external world while remaining out of the reach of too much risk. The goal of recreational equipment is to experience simulated adventure while preventing the occurrence of serious accidents or harm to children. The same principle of safety and security applies to employment and recreation, however, the benefit that safety and risk provide is different in these two inherently different environments. For recreational equipment, allowing children to experience some adventure is beneficial, because it satisfies basic human need while letting children learn in a controlled environment about risk and the consequences which naturally arise out of adventure.

Manufacturer Information

Importer Information

Product Description

A playground with a tower which is made of metal and plastic and stands 900mm tall. The playground includes a straight ladder and plastic tunnel, a curved ladder, straight slide, a strong spring for climbing and a durable plastic roof.

The platform is covered with PVC for better protection and a longer lasting.

Definition of Materials

1. Plastic Part :LLDPE,Rote-moulded .
2. Metal Parts:Galvanized steel pipe ,Color powder coated .
3. Platform/Stepped-ladder :Steel sheet ,PVC coated .
4. Clamp,Catcher ,Foot plate;Aluminum alloy .
5. Bots,Nuts,Washer:Stainless steel.

Module Distribution Map

Module List

Pic.	NO.	Name	Qty	Model Refer	Size
	1	Metal ladder	1	LP-M0061	861x616x1874
	2	900 Spring climbing	1	LM-M0030	995x1000x2157
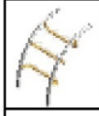	3	900 Carve climbing	1	LM-M0025	628x791x900
	4	7 Shape handrail	2	LM-M0046	205x1046
	5	Catcher	8	LP-A0001	
	6	Clamp	4	LP-A0002	
	7	Scale square roof	1	LP-D23	1450x1442x825
	8	940 Single slide panel	1	LP- GP17	1165x950x350
	9	940 Single slide	1	LP-HT16	595x1095x1750
	10	Vein panel	1	LP-GP37	940×140×1240
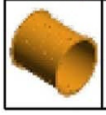	11	760-H600Straight slide	1	LP-HT024	Ø860×600

Nameplate and its application

Nameplate:

Application range:

The product is specially designed for children ranged 3 to 12, making them enjoying fun while playing games.

.

Section 2

General Drawings

Sample-01

info@everbestplayc.com
www.everbestplay.com

Groundplan

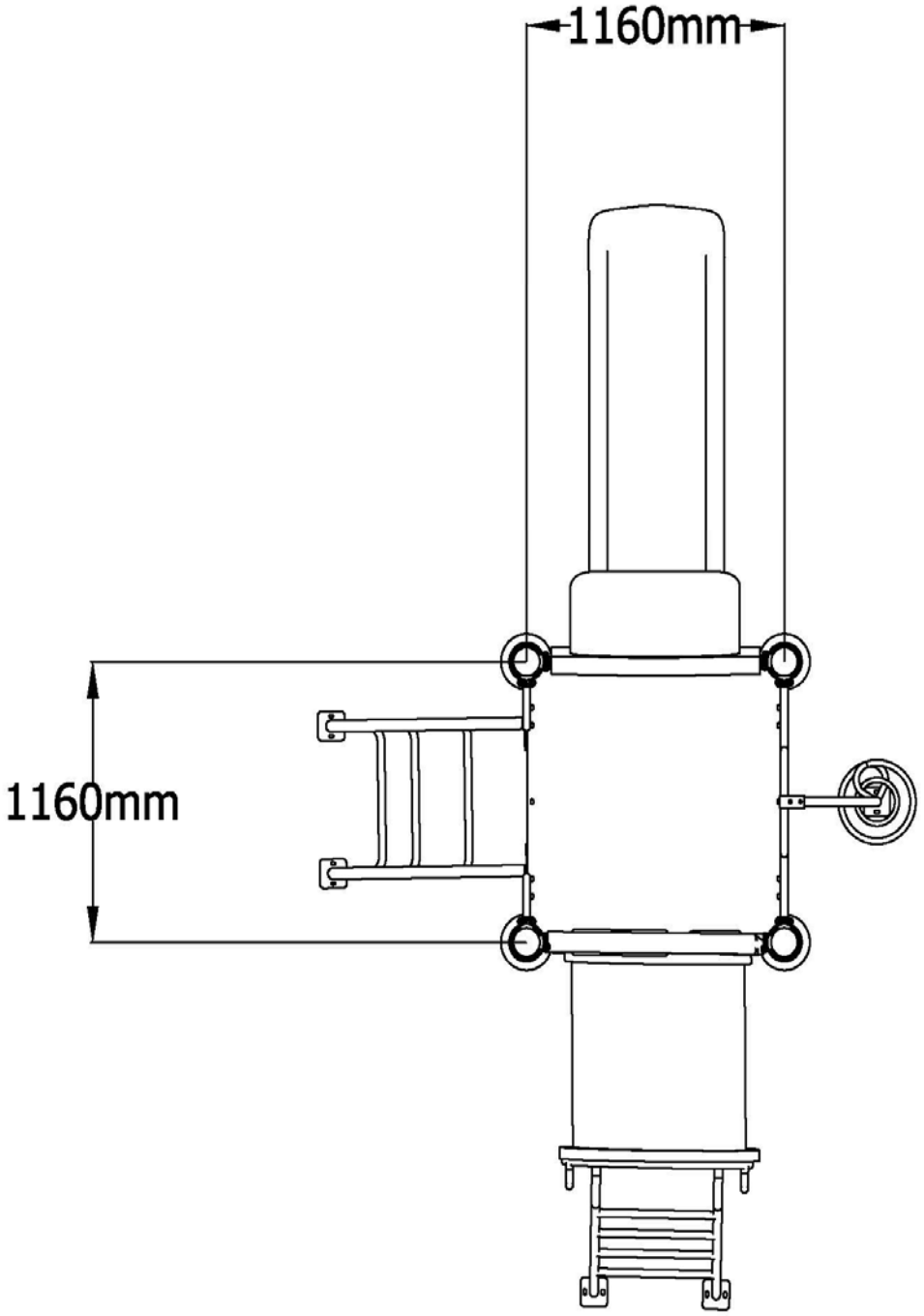

Safety Area

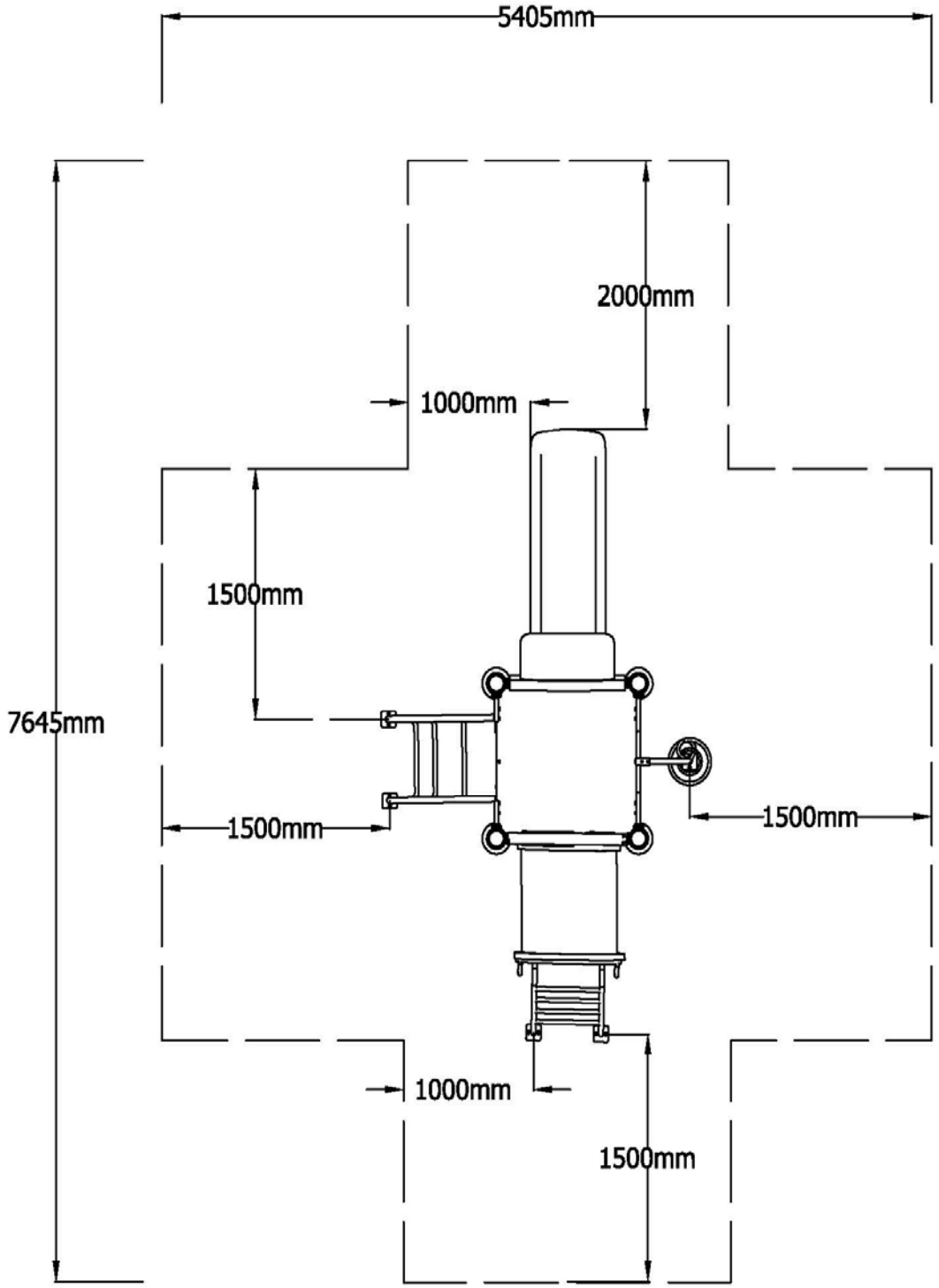
5405mm
2000mm
1000mm
1500mm
7645mm
1500mm
1500mm
1000mm
1500mm

Dimensions

Size:(L*W*H):4145*2405*3860mm

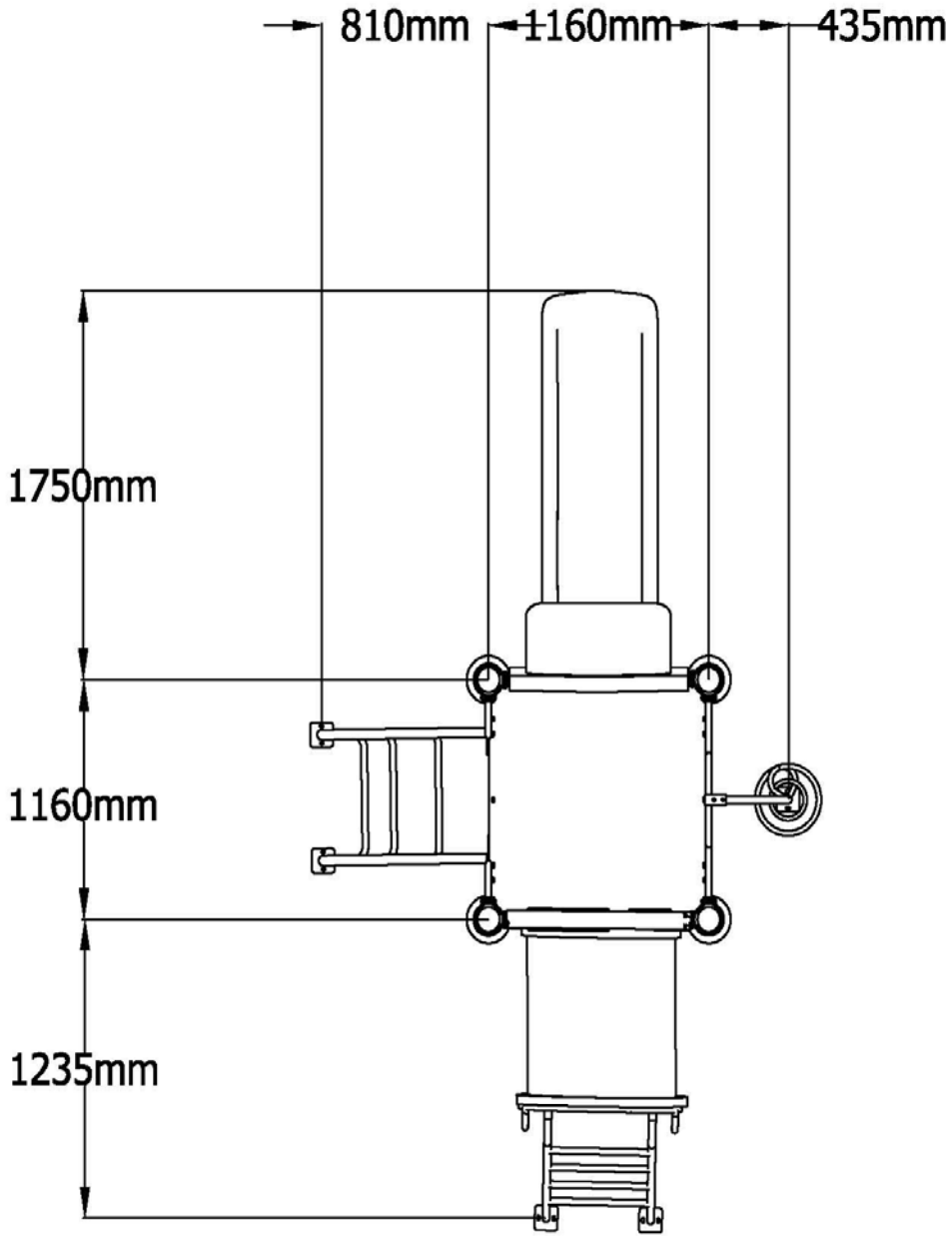

Falling Height

Maximum Falling Height:900mm

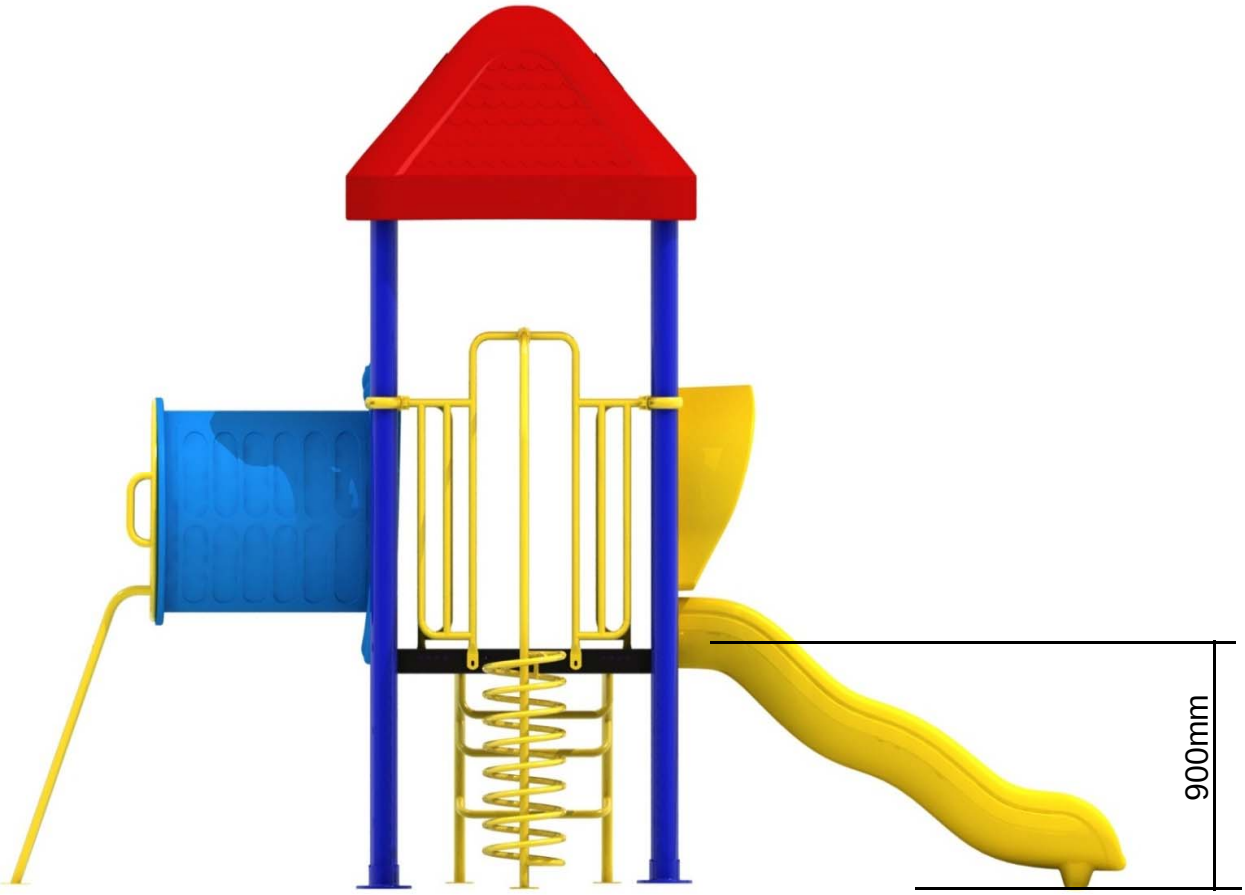

Posts and Platform Distribution Map

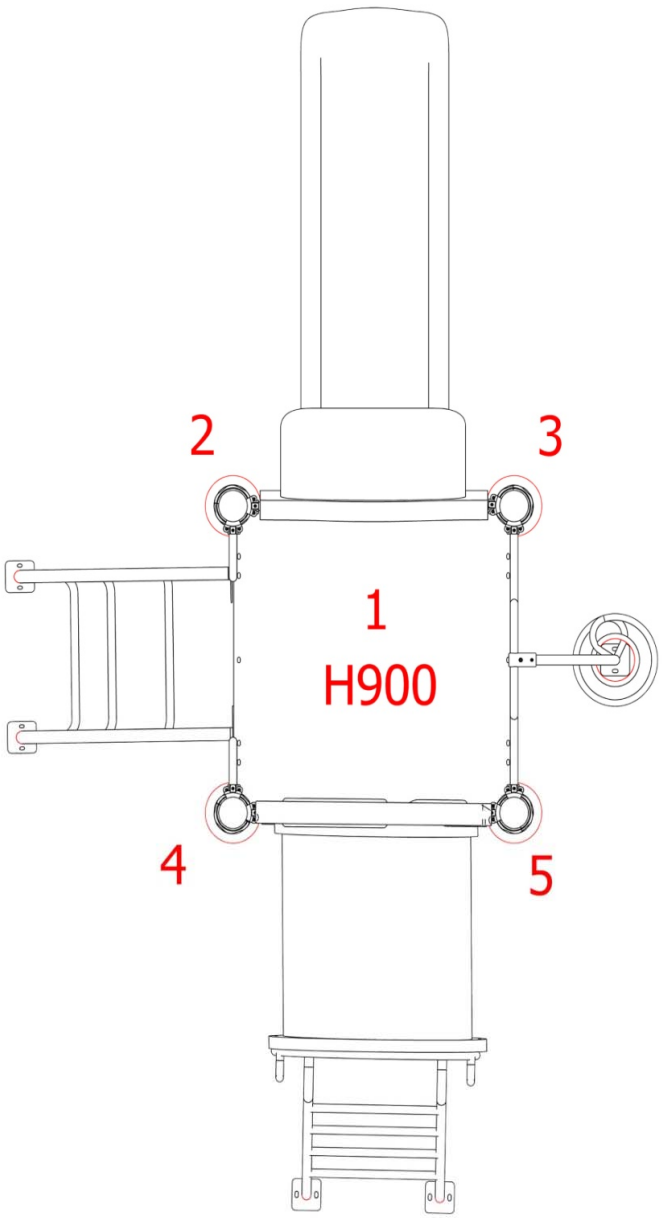

Pic.	NO.	Name	Qty	Model Refer	Size
	1	Platform	1	LP-M0026	1160*1160mm Thickness:2.0mm
	2-5	260A.90	4	LP-M0038-26	ø114*2800mm Thickness:2.0mm

Section 3

Module Installation

Sample-01

info@everbestplayc.com
www.everbestplay.com

Platform
LP-M0026

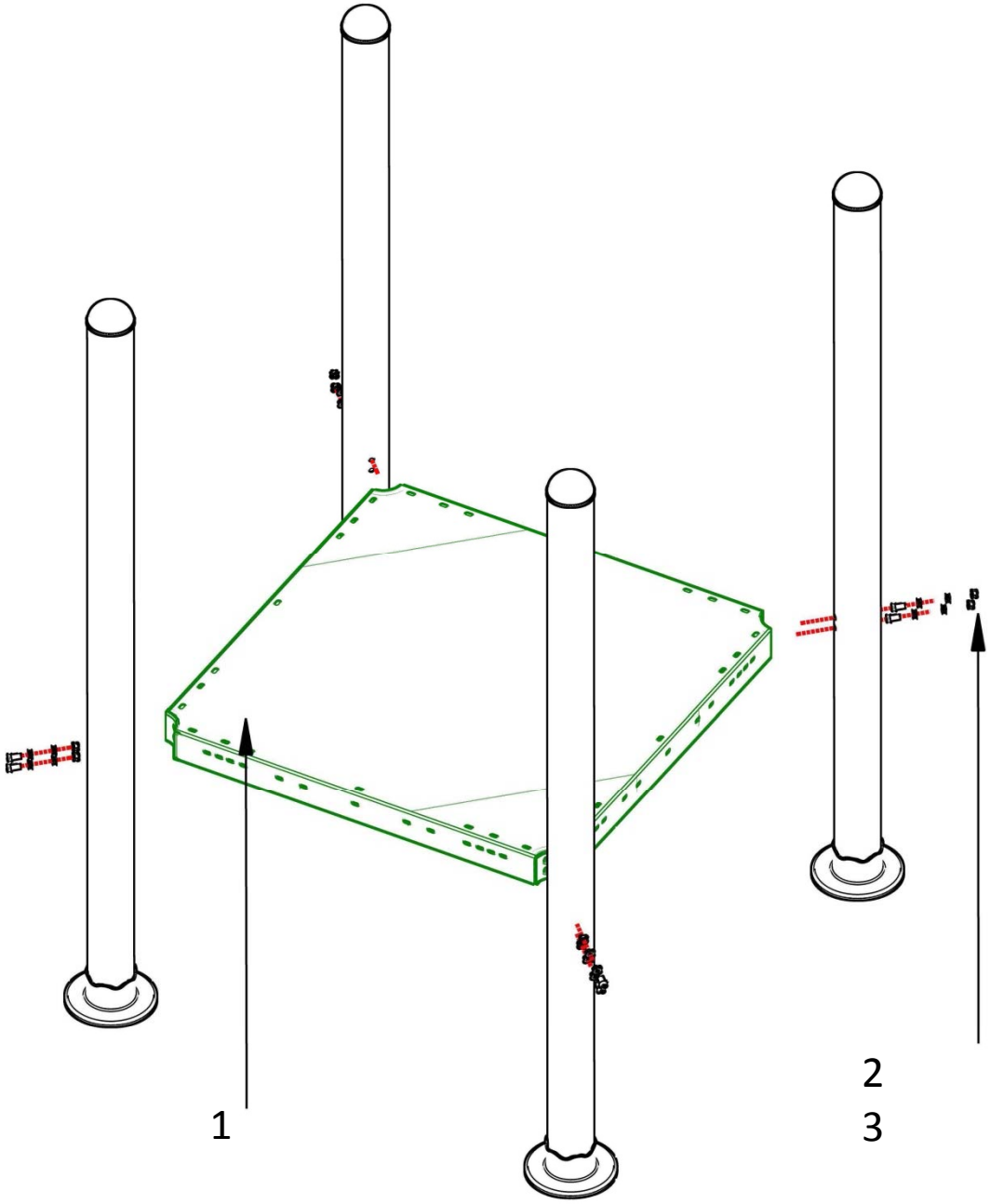

Pic.	NO.	Name	Qty	Model Refer
	1	Platform	1	LP-M0026
	2	hexagon bolt M10*25	8	
	3	washer M10*2	8	

Catcher
LP-A0001

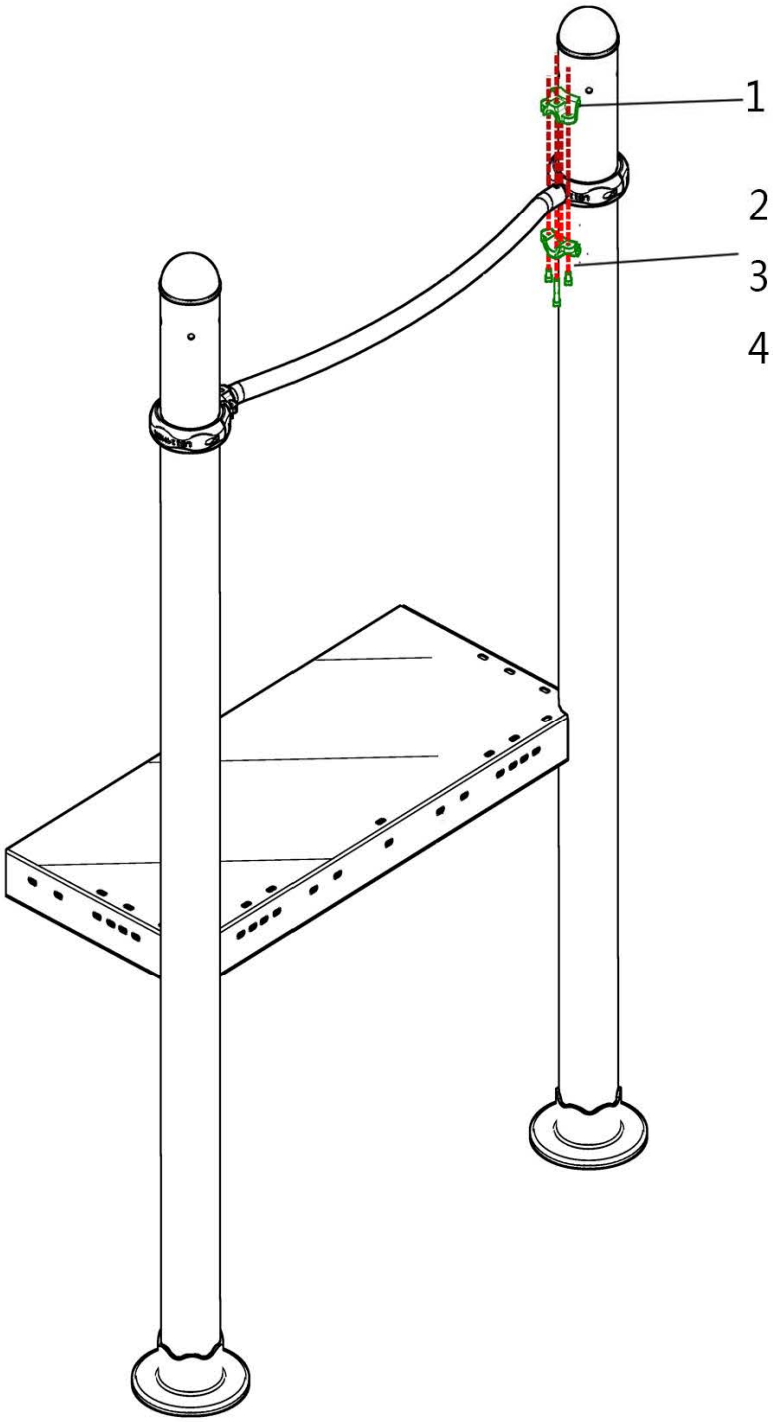

Pic.	NO.	Name	Qty	Model Refer
	1	Catcher	1	LP-A0001
	2	Hex-centered bolt M6*15	2	
	3	Hex-centered bolt M6*45	1	
	4	Nut M6	3	

Clamp
LP-A0002

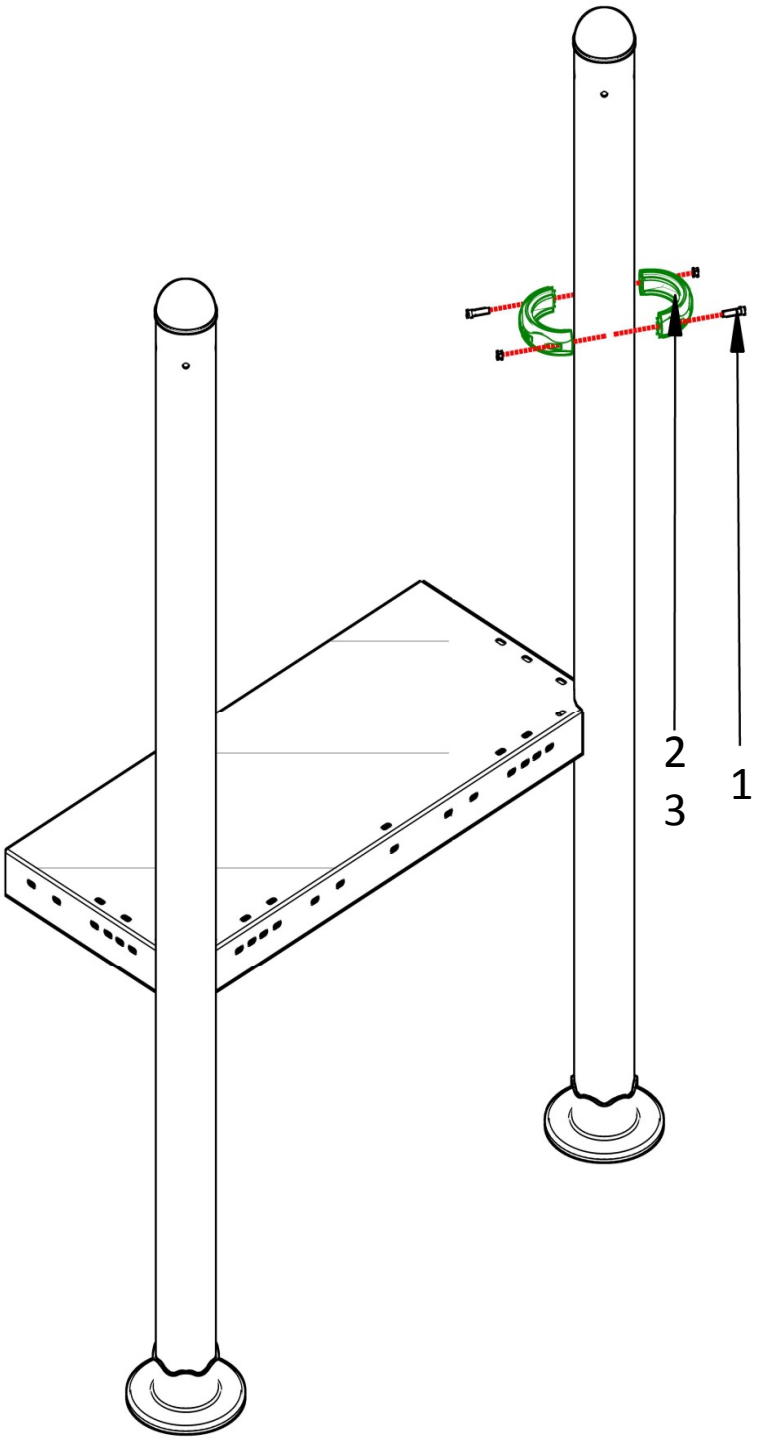

Pic.	NO.	Name	Qty	Model Refer
	1	Hex-centered bolt M6*30	2	
	2	Nut M6	2	
	3	Clamp	1	LP-A0002

760-H600 Straight slide
LP-HT024

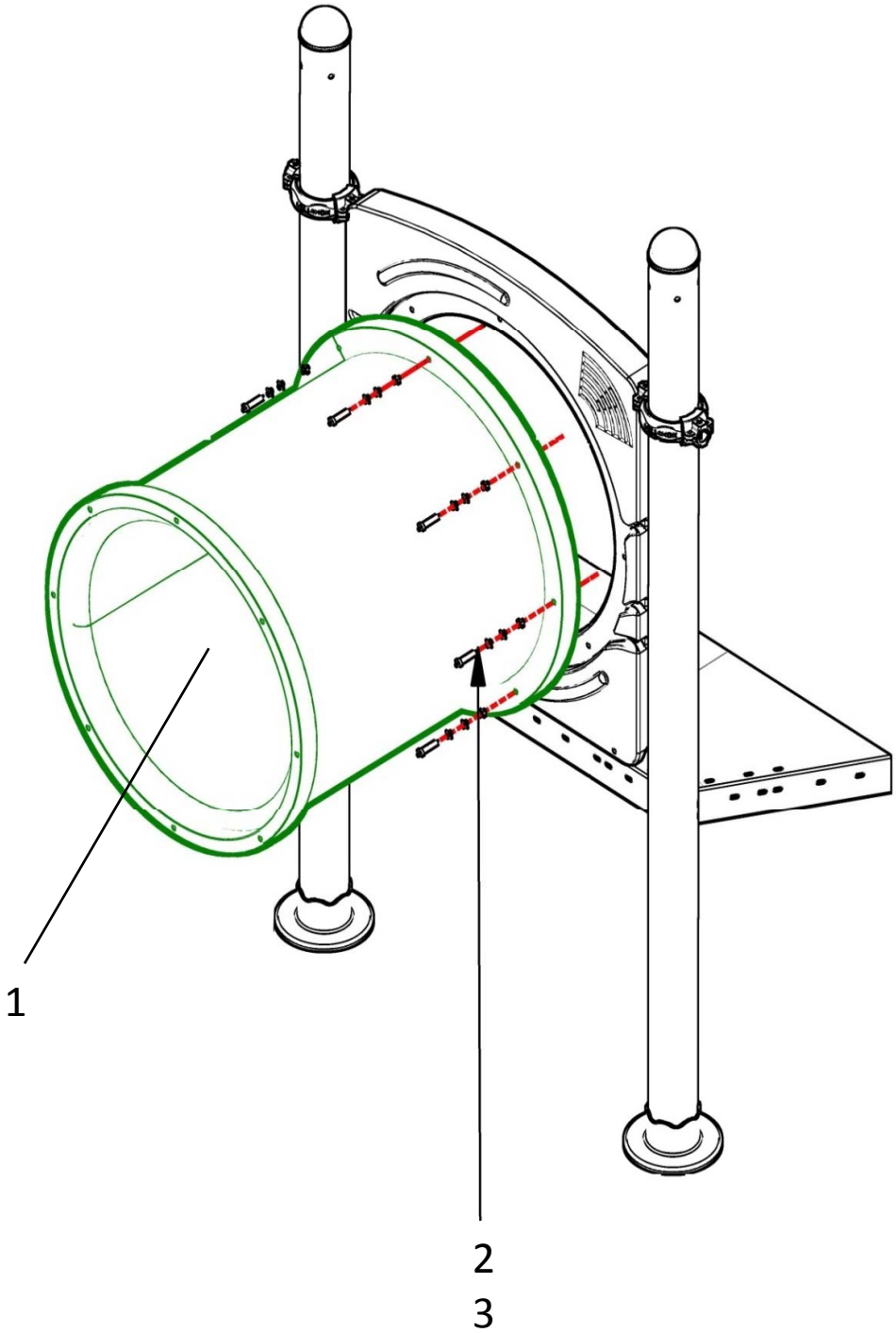

Pic.	NO.	Name	Qty	Model Refer
	1	760-H600 Straight slide	1	LP-HT024
	2	Round hex-centered bolt M10*25	8	
	3	Washer M10*2	8	

Module Installation

Vein panel
LP-GP37

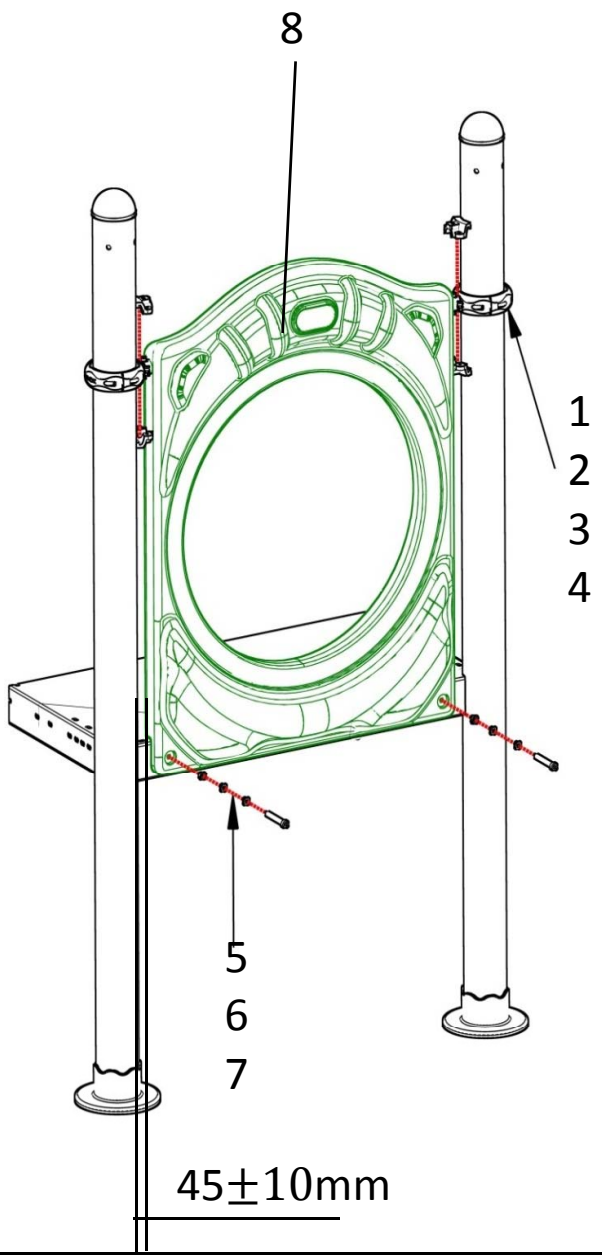

Pic.	NO.	Name	Qty	Model Refer
	1	Catcher	2	LP-A0001
	2	Hex-centered bolt M6*15	4	
	3	Hex-centered bolt M6*45	2	
	4	Nut M6	6	
	5	Round hex-centered bolt M10*50	2	
	6	Lock nut M10	2	
	7	Washer M10*2	4	
	8	Vein panel	1	LP-GP37

900 Curve climbing
LM-M0025

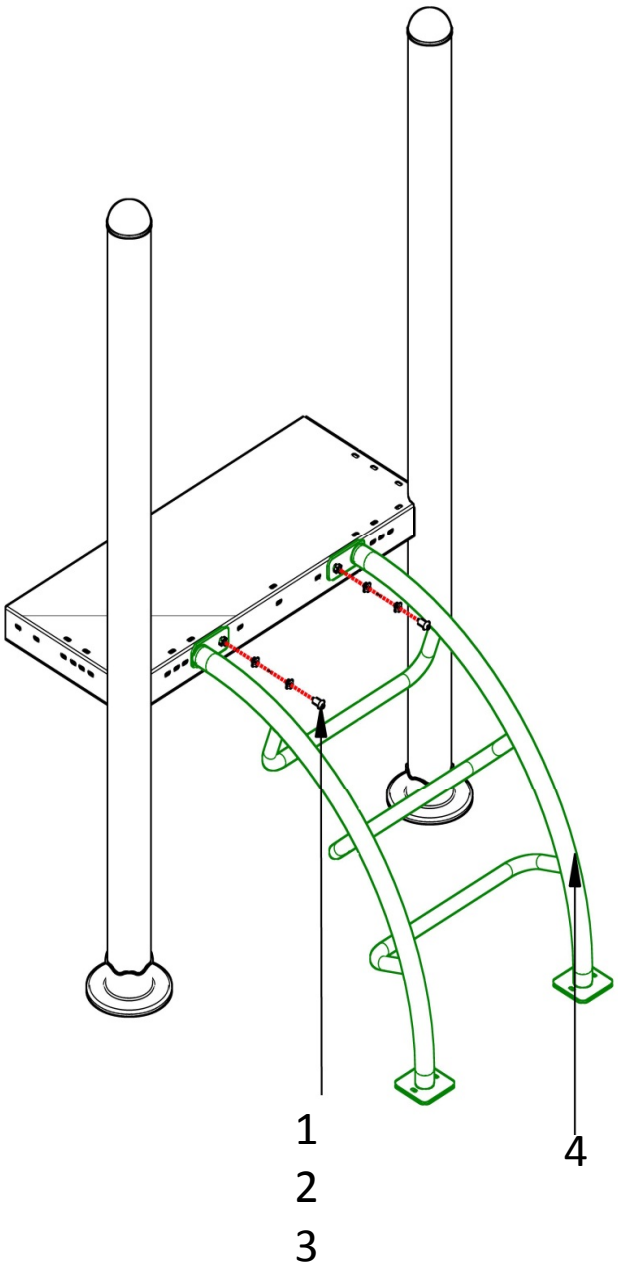

Pic.	NO.	Name	Qty	Model Refer
	1	Round hex-centered bolt M10*25	2	
	2	Lock nut M10	2	
	3	Washer M10*2	4	
	4	900 Curve climbing	1	LM-M0025

7 Shape handrail
LM-M0046

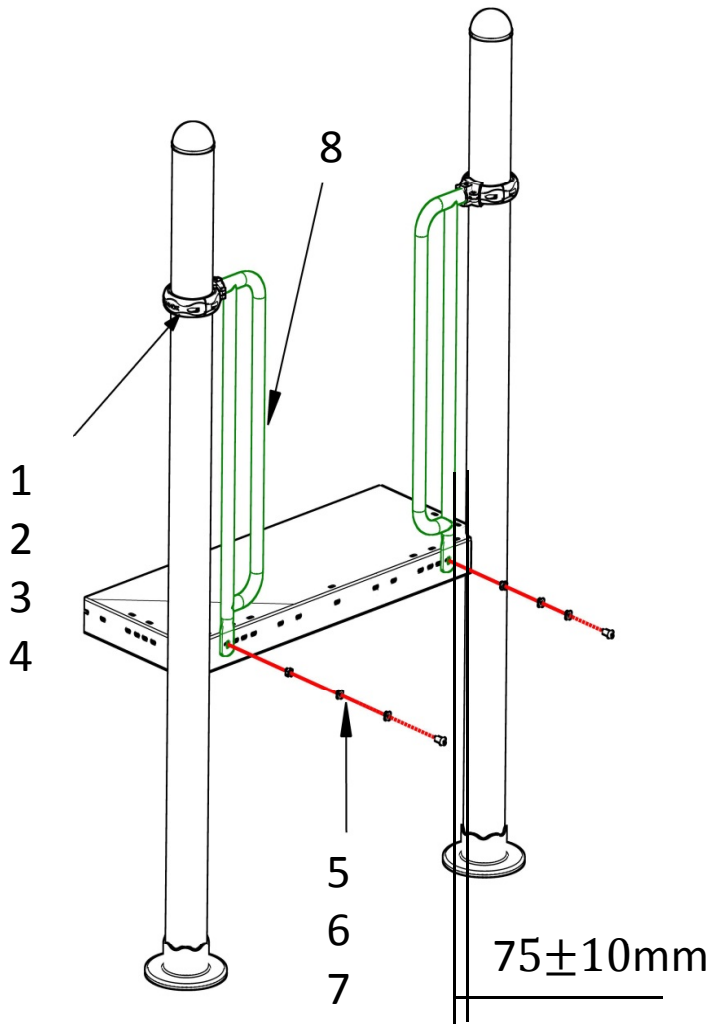

Pic.	NO.	Name	Qty	Model Refer
	1	Catcher	2	LP-A0001
	2	Hex-centered bolt M6*15	4	
	3	Hex-centered bolt M6*45	2	
	4	Nut M6	6	
	5	Round hex-centered bolt M10*25	2	
	6	Lock nut M10	2	
	7	Washer M10*2	4	
	8	7 Shape handrail	2	LM-M0046

Scale square roof
LP-D23

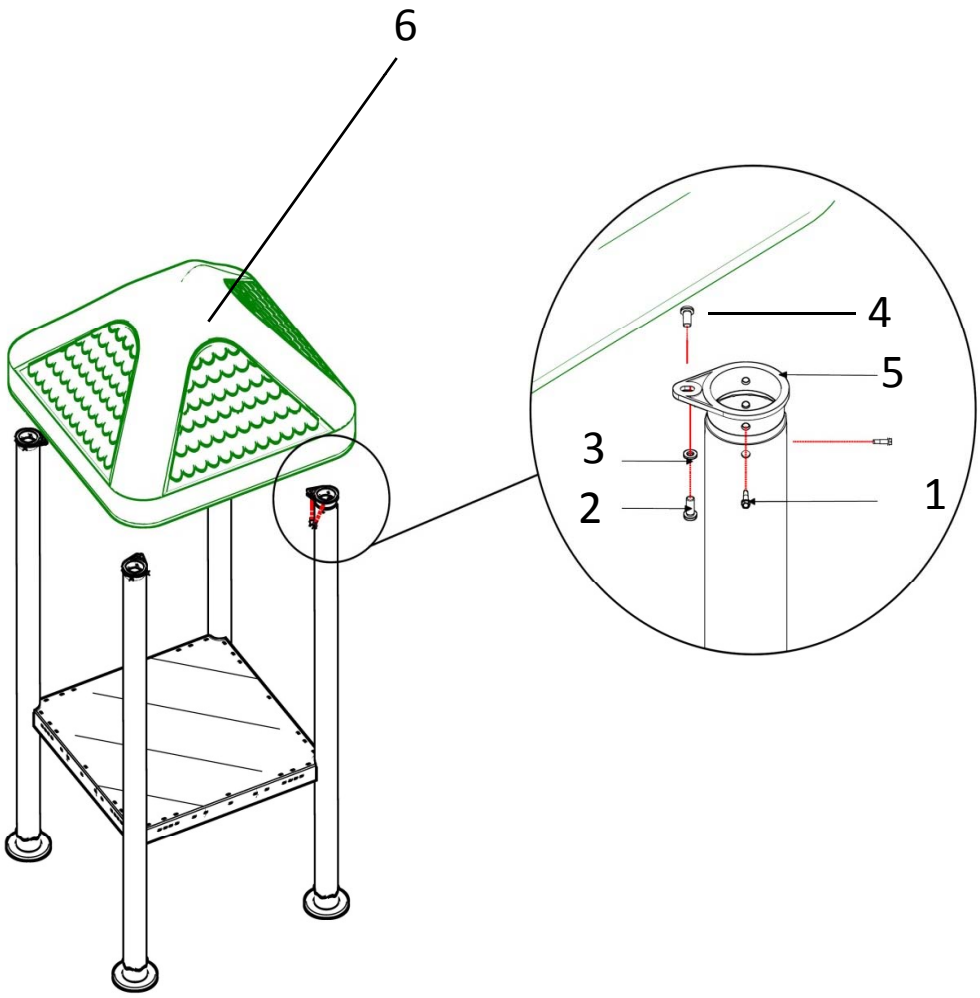

Pic.	NO.	Name	Qty	Model Refer
	1	Self-threading screw M5.5*15	8	
	2	Round hex-centered bolt M10*25	4	
	3	Washer M10*2	4	
	4	Embedded screw M10	4	
	5	Fixed top fittings	4	LPZS-046
	6	Scale square roof	1	LP-D23

940 Single slide panel
LP-GP17

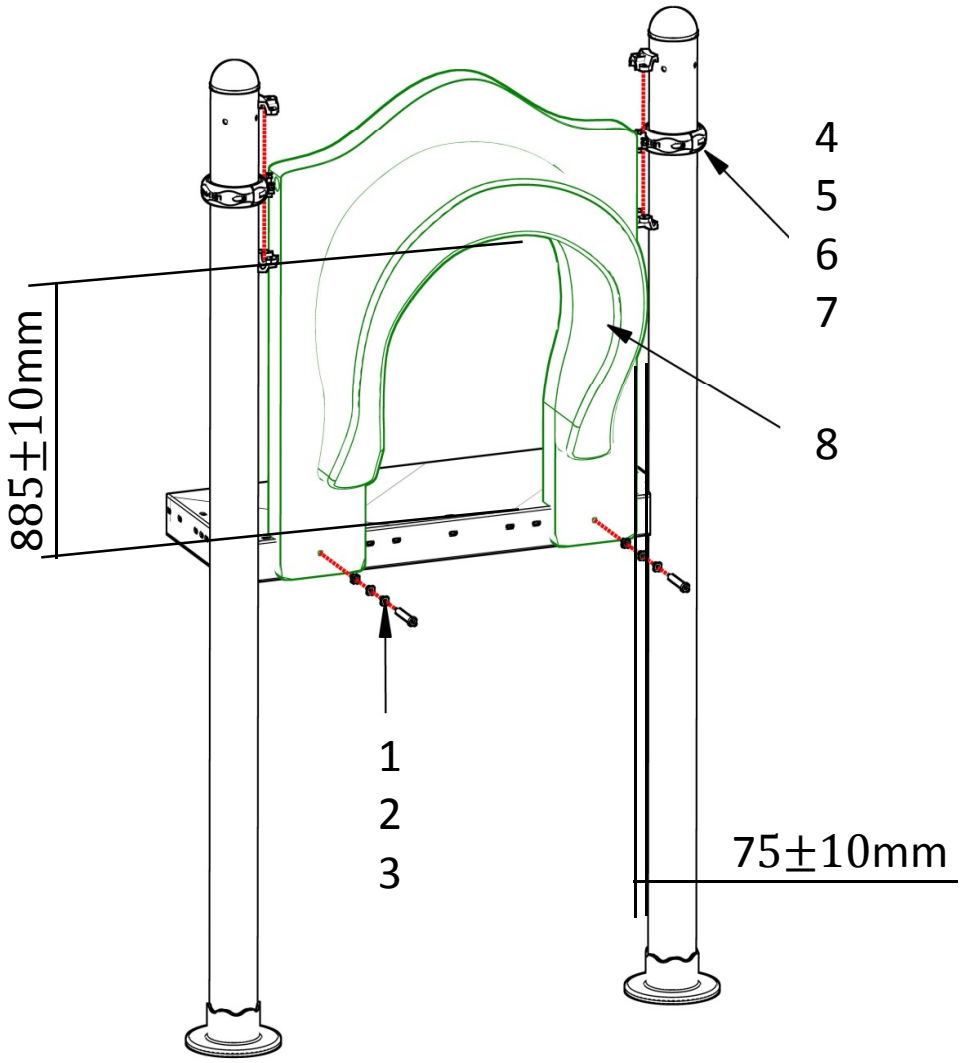

Pic.	NO.	Name	Qty	Model Refer
	1	Round hex-centered bolt M10*25	2	
	3	Washer M10*2	2	
	4	Catcher	2	LP-A0001
	5	Hex-centered bolt M6*15	4	
	6	Hex-centered bolt M6*45	2	
	7	Nut M6	6	
	8	940 Single slide panel	1	LP-GP17

940 Single slide
LP-HT16

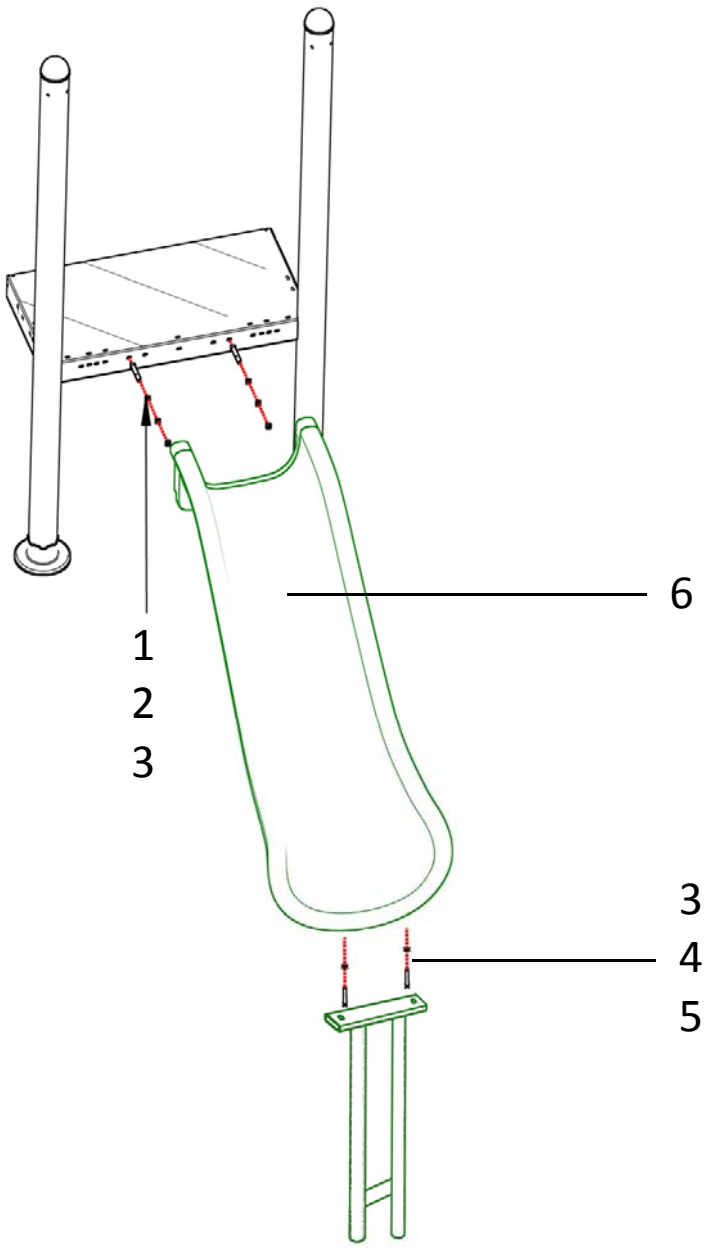

Pic.	NO.	Name	Qty	Model Refer
	1	Round hex-centered bolt M10*60	2	
	2	Lock nut M10	2	
	3	Washer M10*2	6	
	4	Round hex-centered bolt M10*45	2	
	5	Single slide anchor	1	LM-FB350-13
	6	940 Single slide	1	LP-HT16

Metal ladder
LP-M0061

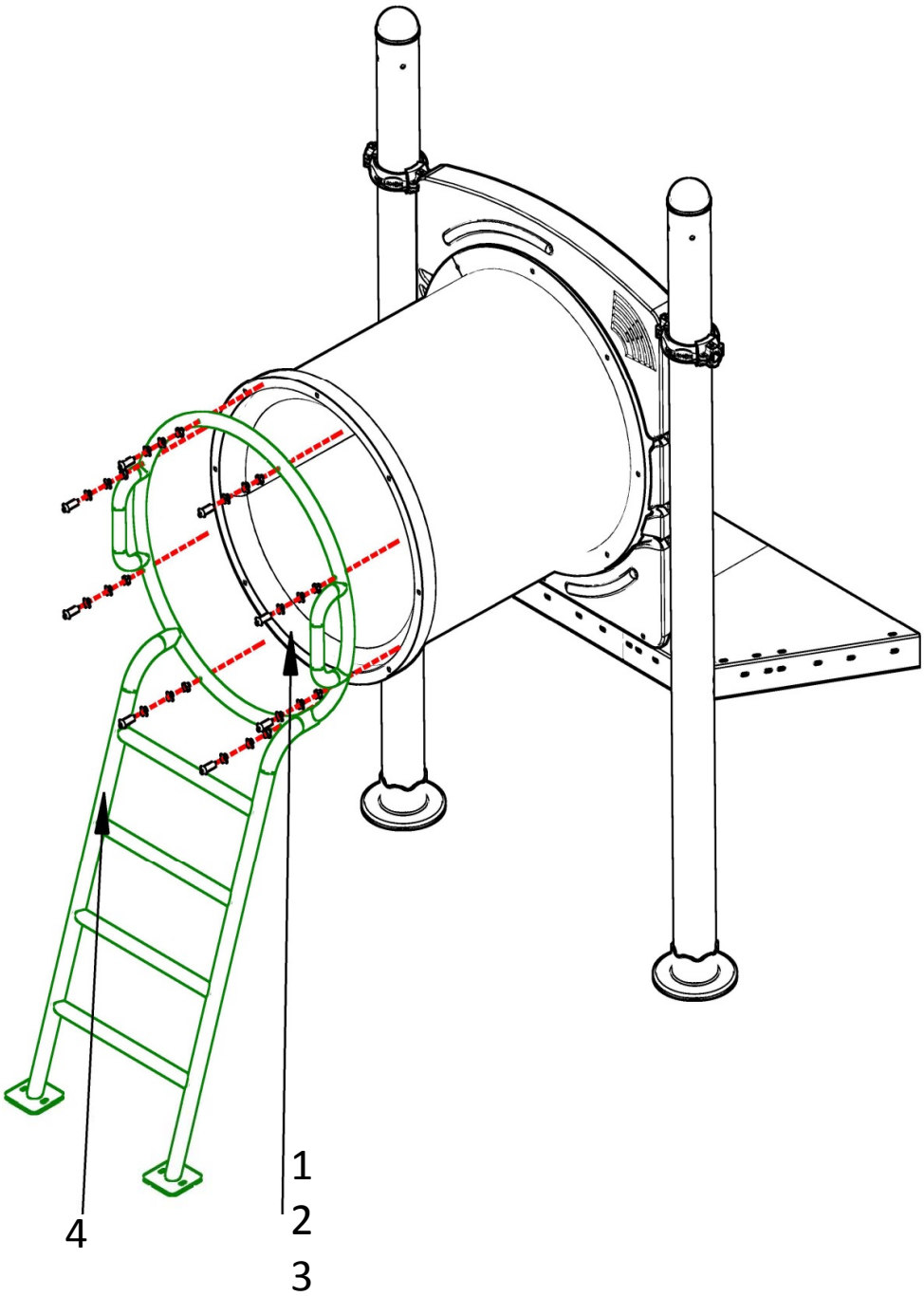

Pic.	NO.	Name	Qty	Model Refer
	1	Round hex-centered bolt M10*50	8	
	2	Round hex nut M10	8	
	3	Washer M10*2	16	
	4	Metal ladder	1	LP-M0061

900 Spring climbing
LM-M0030

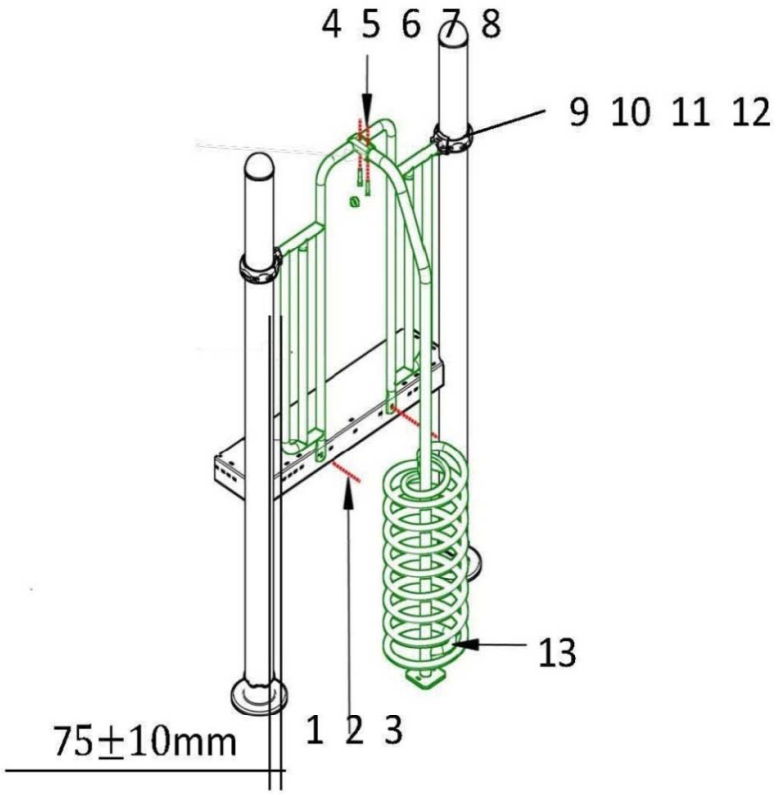

Pic.	NO.	Name	Qty	Model Refer
	1	Round hex-centered bolt M10*25	2	
	2	Lock nut M10	2	
	3	Washer M10*2	4	
	4	Hex-centered bolt M6*50	1	
	5	Nut M6	1	
	6	Hex-centered bolt M8*45	1	
	7	Nut M8	1	
	8	38-32 catcher	1	
	9	Catcher	2	LP-A0001
	10	Hex-centered bolt M6*15	4	
	11	Hex-centered bolt M6*45	2	
	12	Nut M6	6	
	13	900 Spring climbing	1	LM-M0030

Section 4

Technical Drawings

Sample-01

info@everbestplayc.com
www.everbestplay.com

Scale square roof
LP-D23

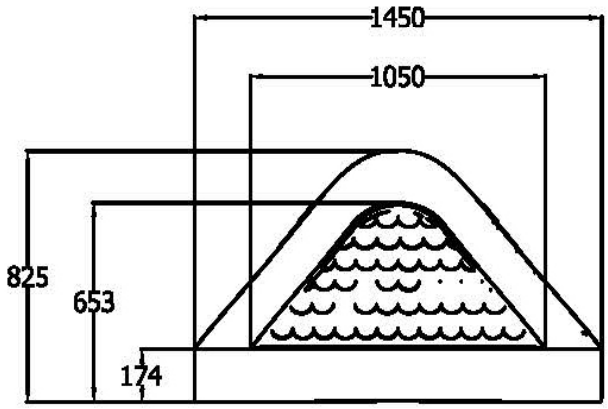

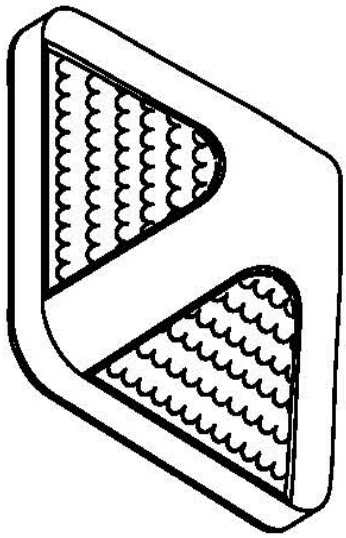

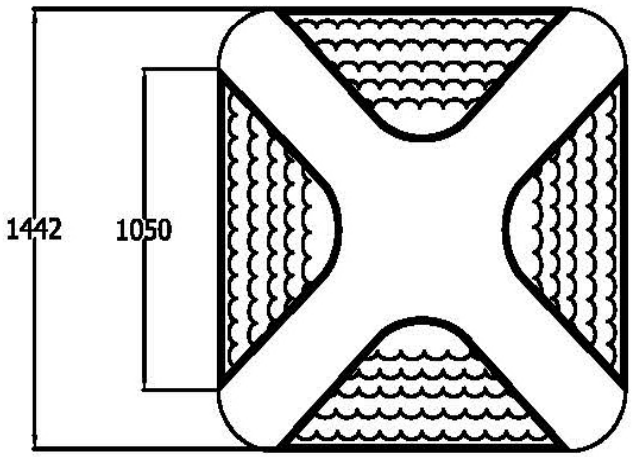

Tolerance:±10
5<Thickness <8
LLDPE
Unit:mm

760-H600 Straight slide
LP-HT024

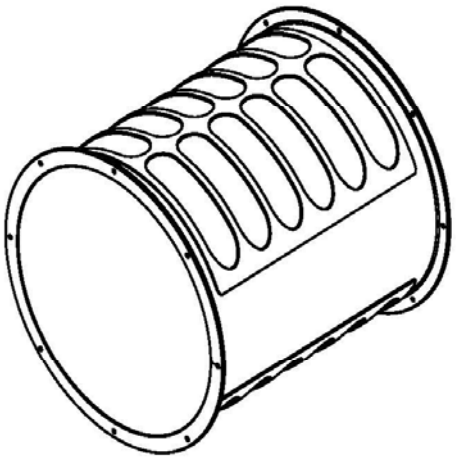

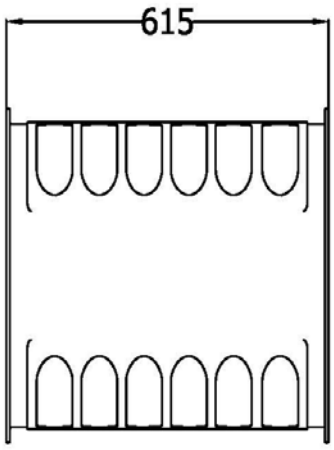

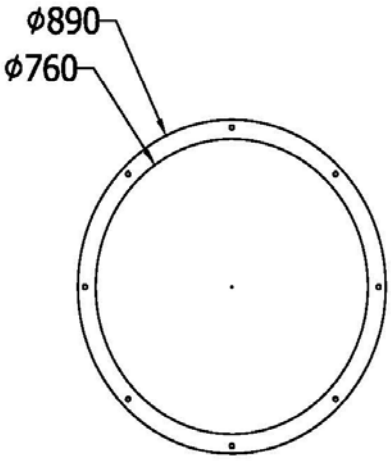

Tolerance:±10
5<Thickness <8
LLDPE
Unit:mm

940 Single slide
LP-HT16

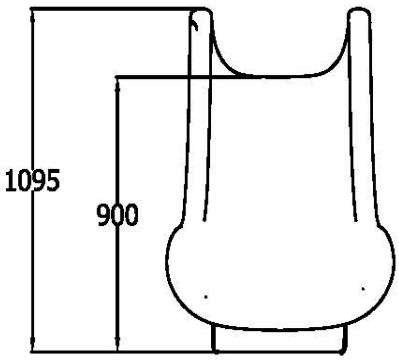

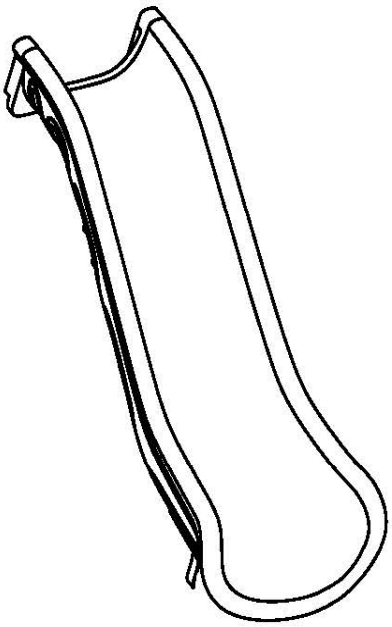

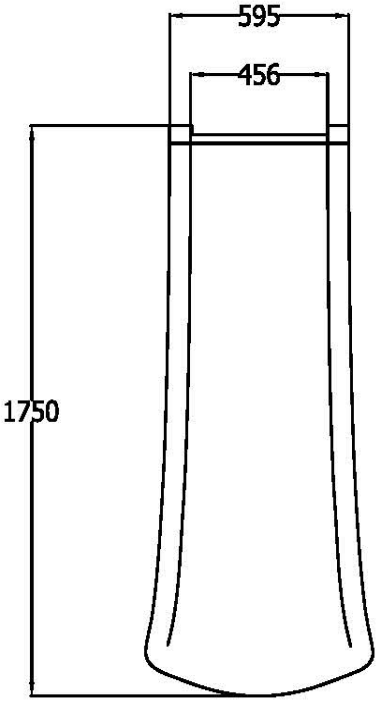

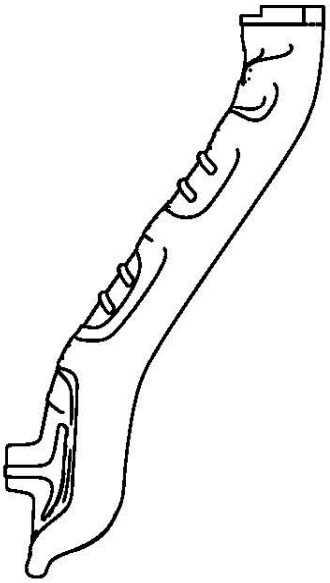

Tolerance:±10
5<Thickness <8
LLDPE
Unit:mm

940 Single slide panel
LP-GP17

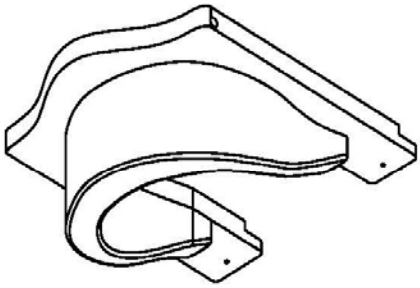

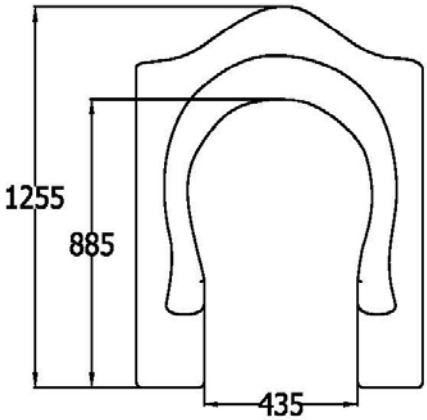

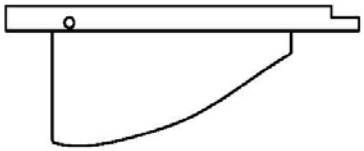

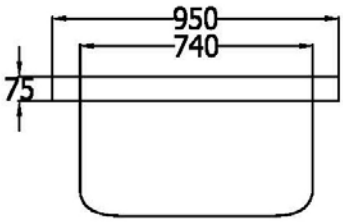

Tolerance:±10
5<Thickness <8
LLDPE
Unit:mm

Vein panel
LP-GP37

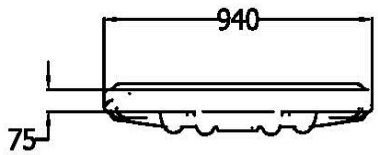

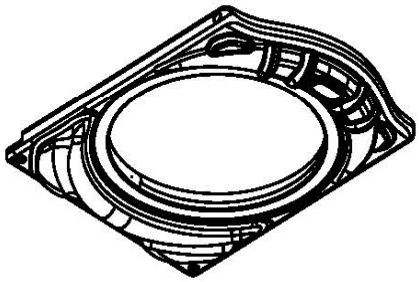

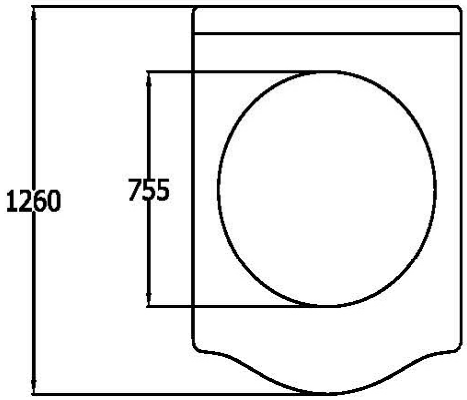

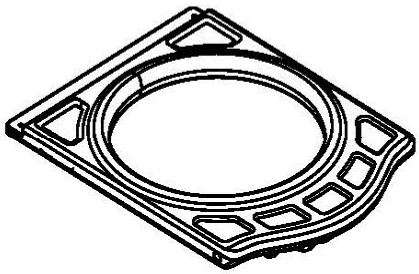

Tolerance:±10
5<Thickness <8
LLDPE
Unit:mm

Fixed top fittings
LPZS-046

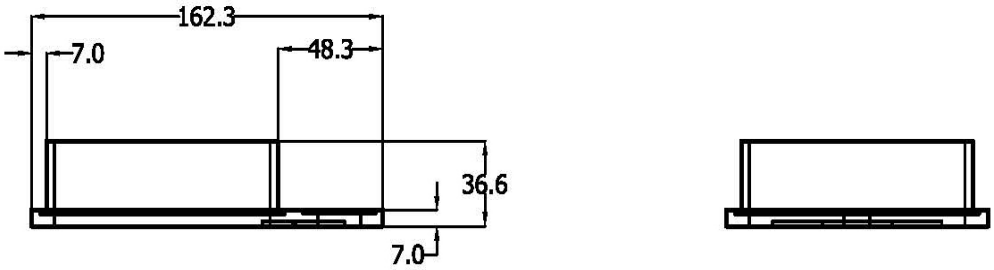

A-A
1 : 3

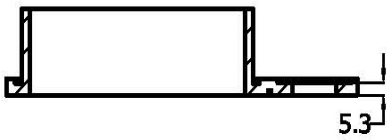

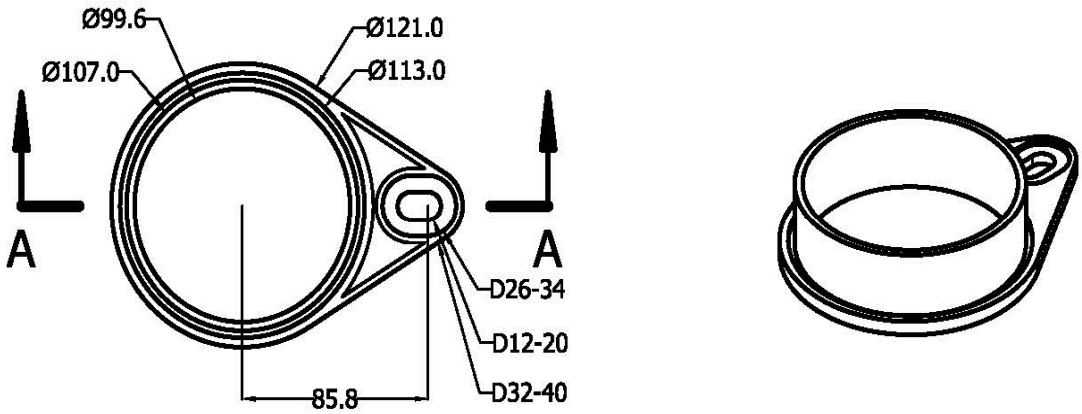

Tolerance:±5
5<Thickness <8
LLDPE
Unit:mm

900 Carve climbing
LM-M0025

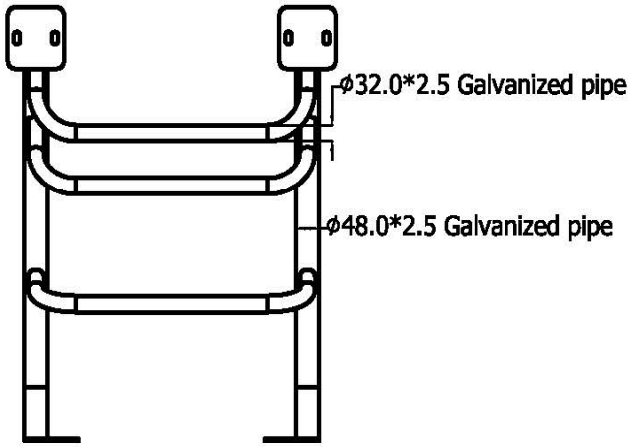

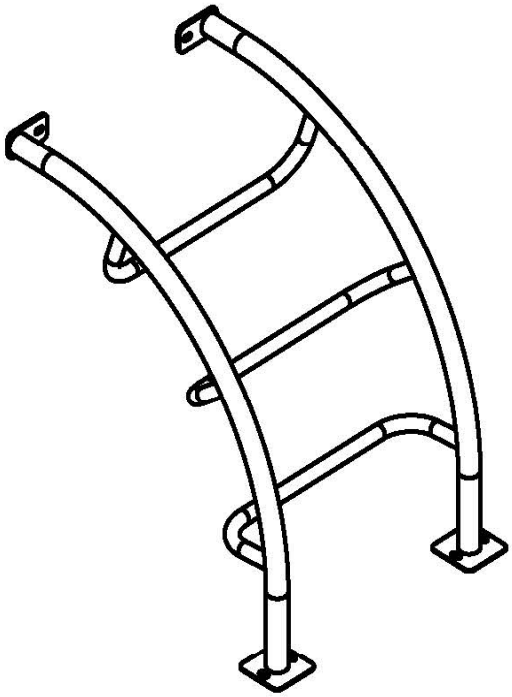

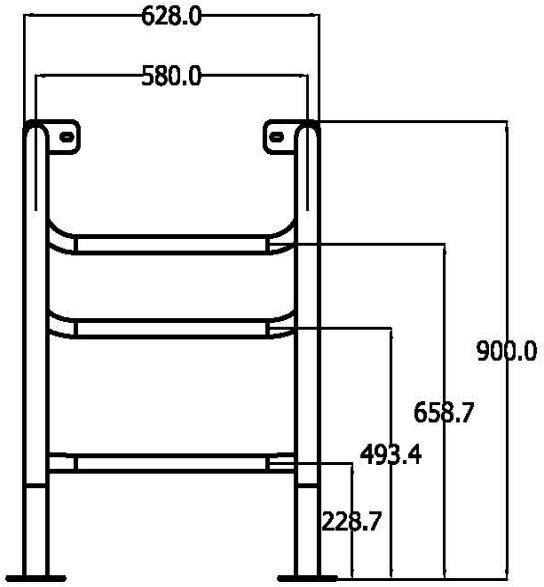

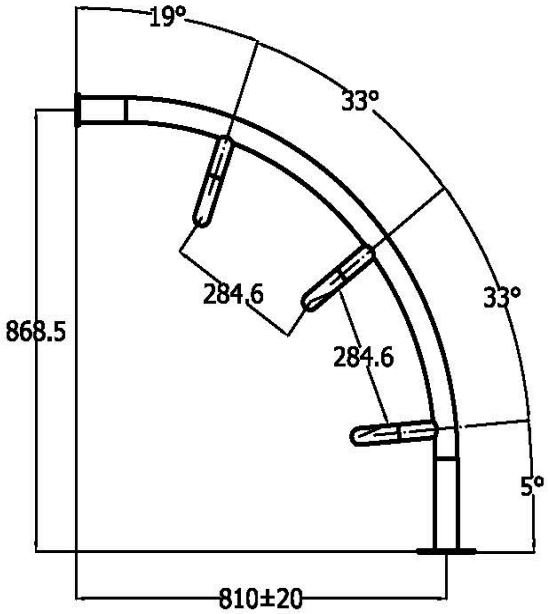

Tolerance:±5
Galvanized pipe
Unit:mm

Platform
LC-M0026

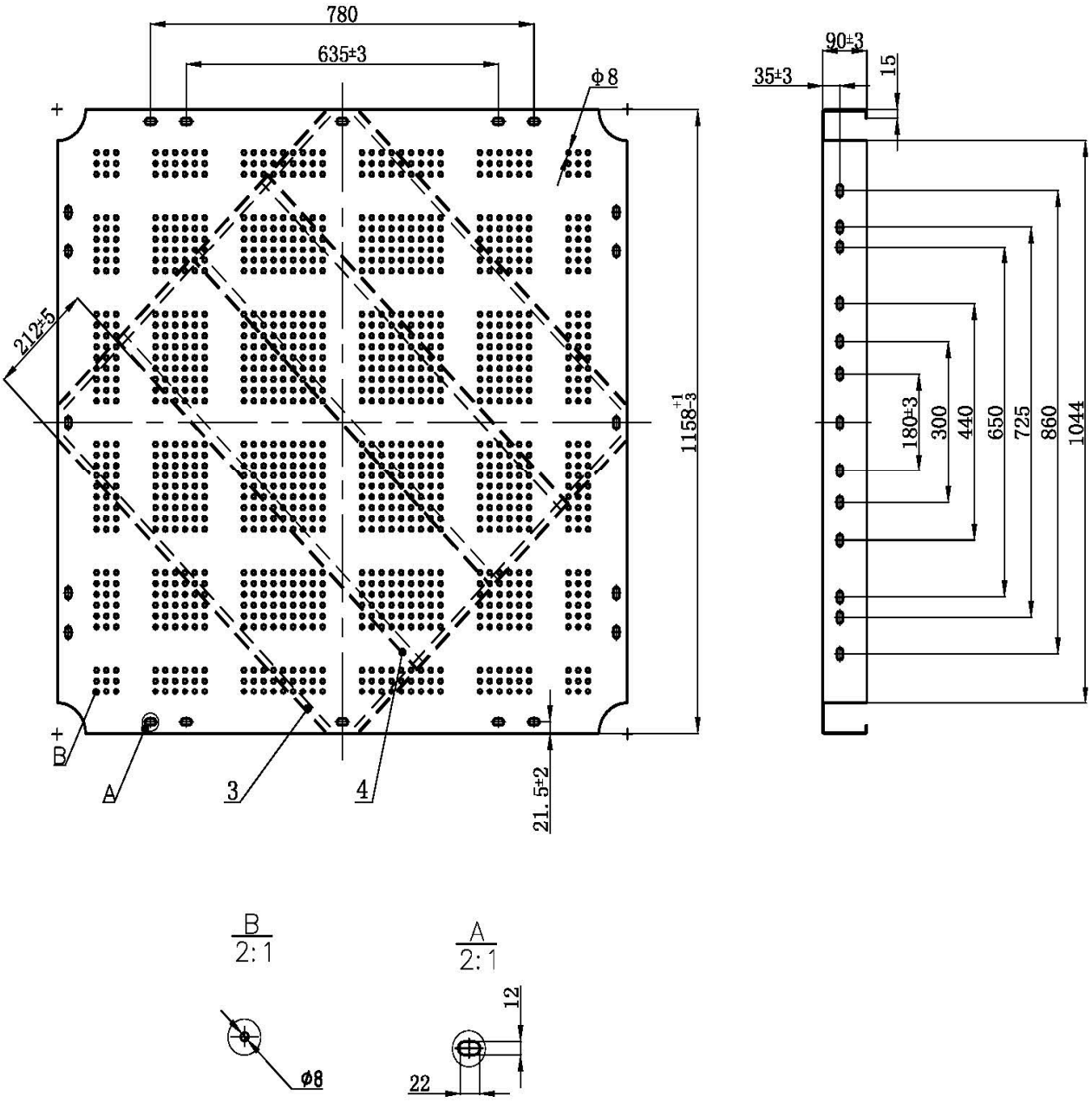

Thickness :2
Metal plate
Unit:mm

7 Shape handrail
LM-M0046

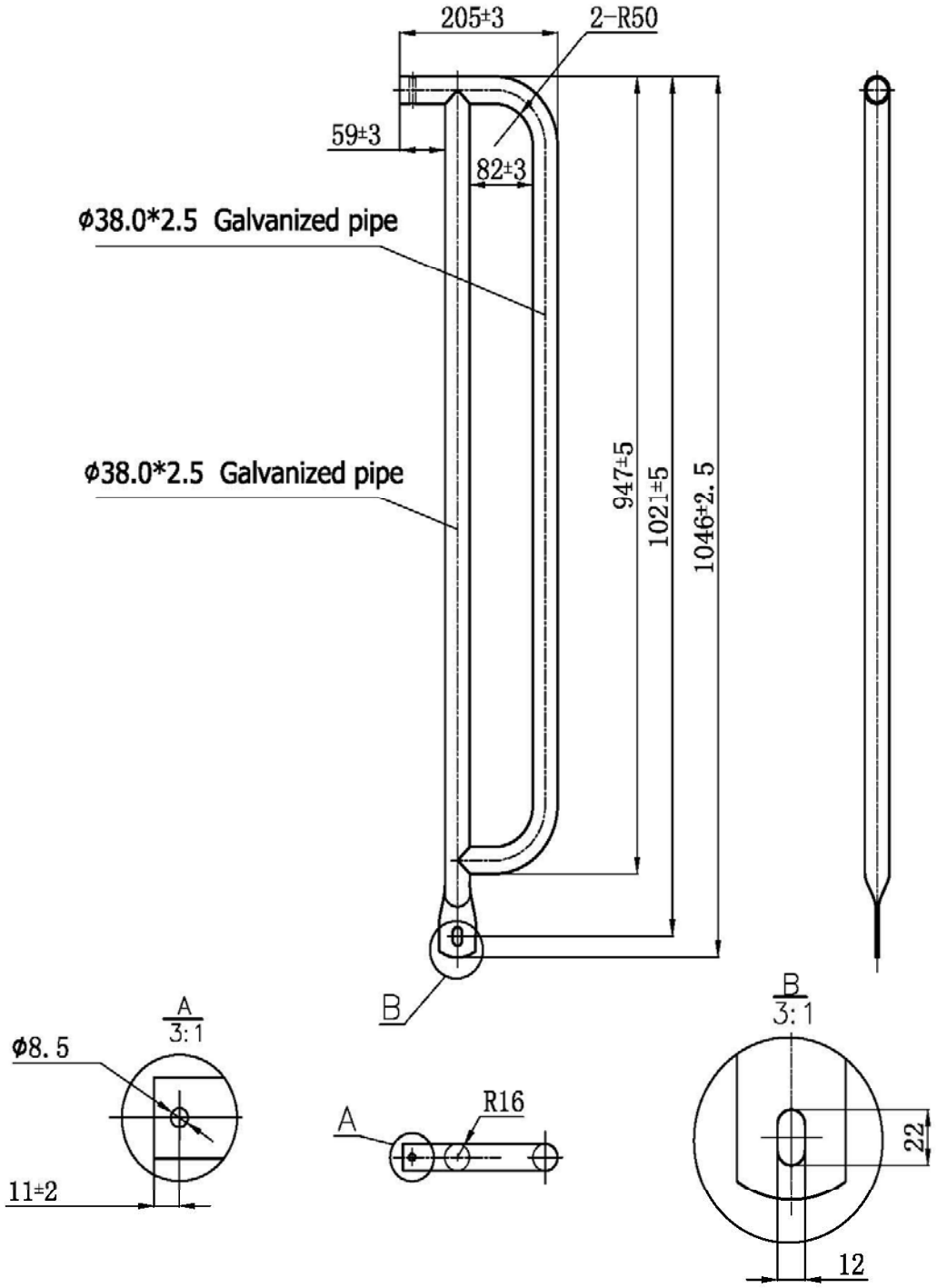

Tolerance:±5
Galvanized pipe
Unit:mm

Matel ladder
LP-M0061

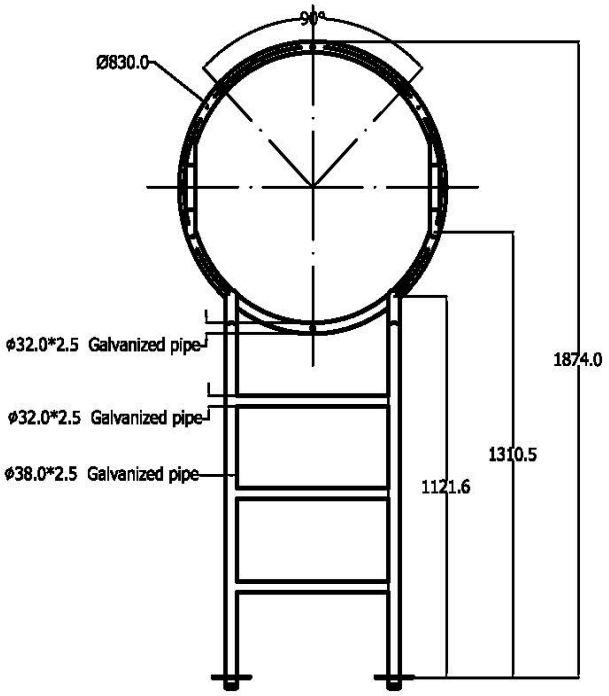

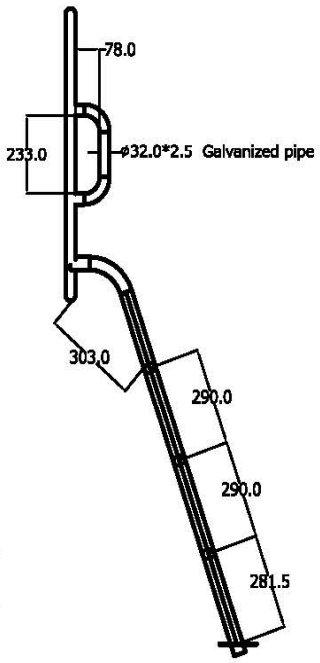

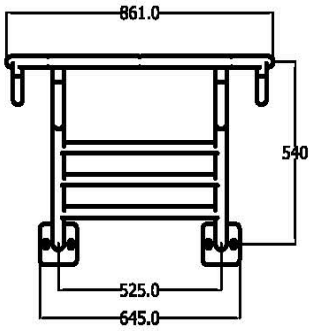

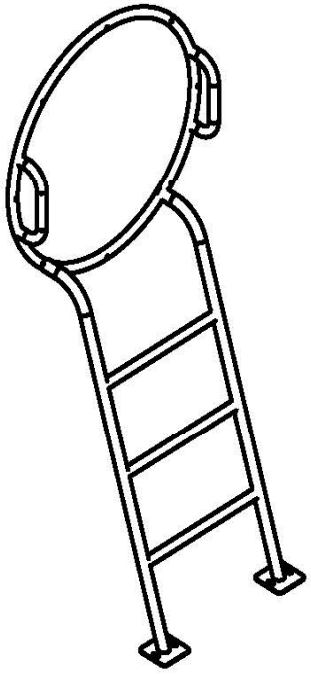

Tolerance:±5
Galvanized pipe
Unit:mm

Climbing handrail
LP-M002

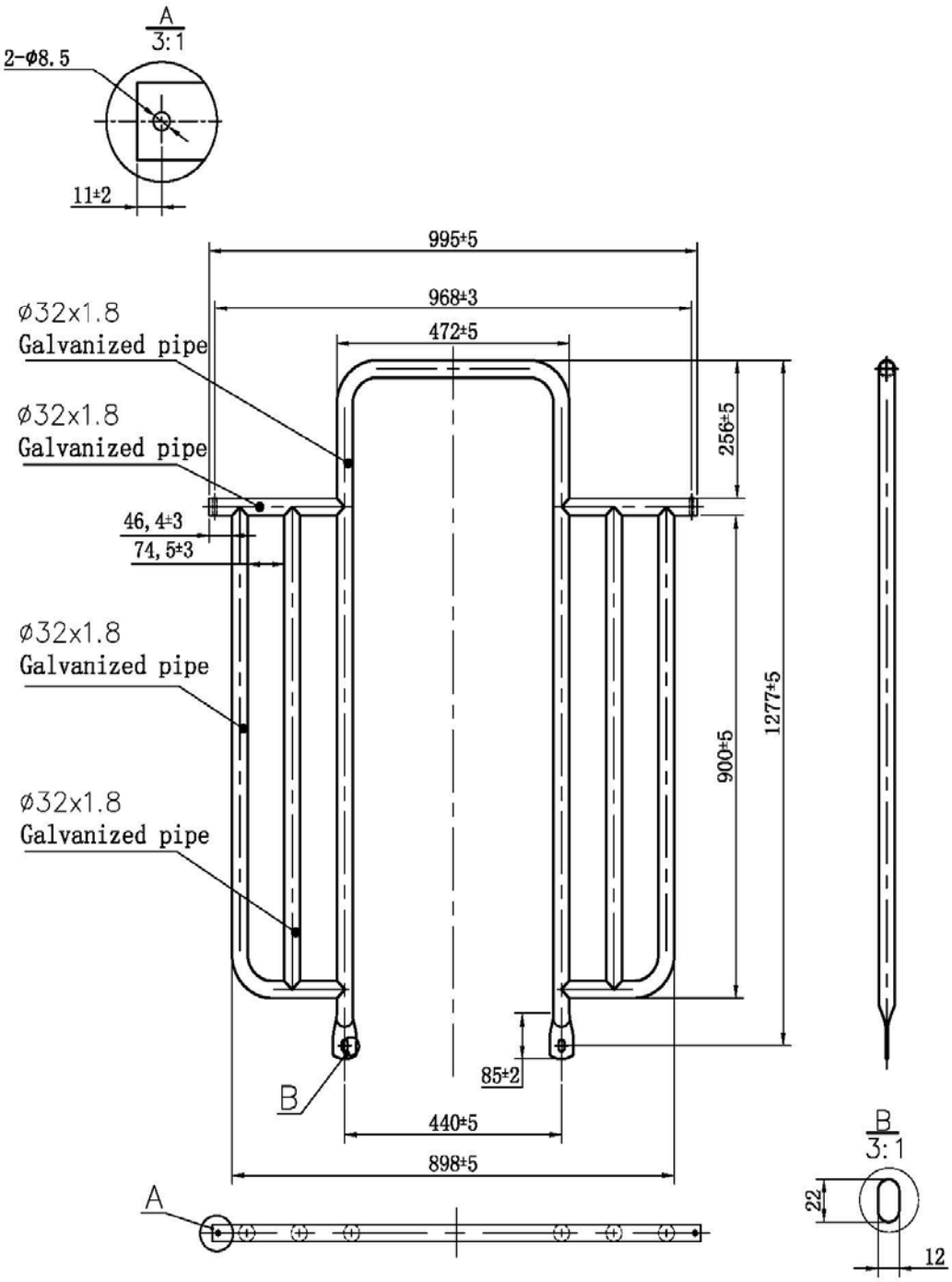

Tolerance:±5
Galvanized pipe
Unit:mm

Single slide anchor
LM-FB350-13

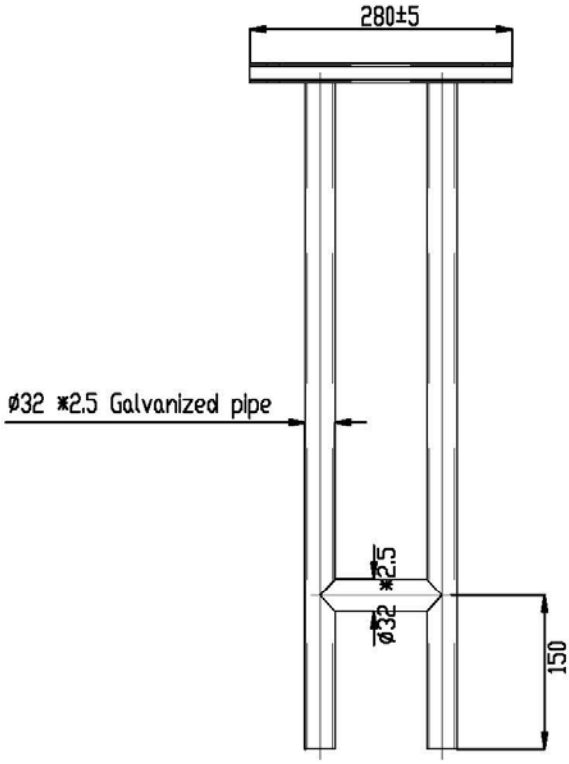

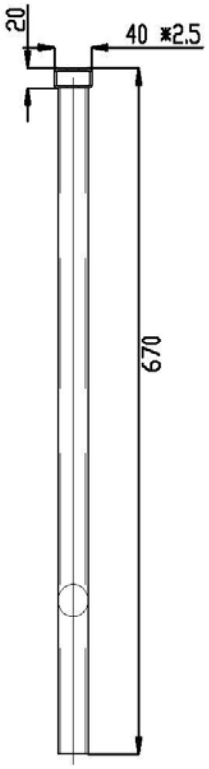

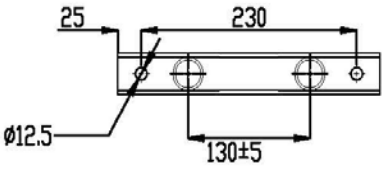

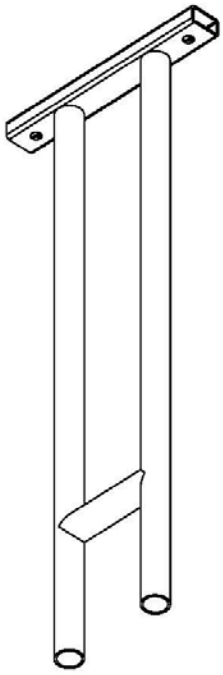

Tolerance:±5
Galvanized pipe
Unit:mm

900 Spring climbing
LM-M0030

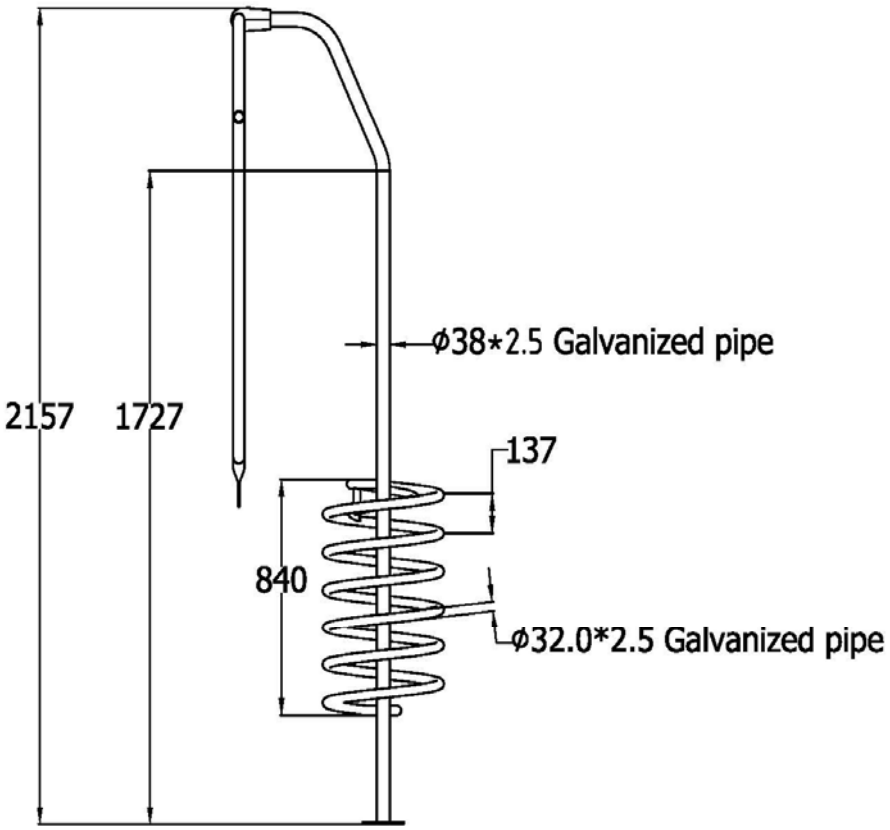

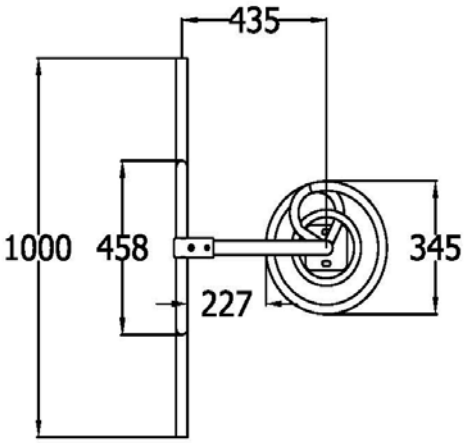

Tolerance:±5
Galvanized pipe
Unit:mm

114 Foot plate
LC-A0001

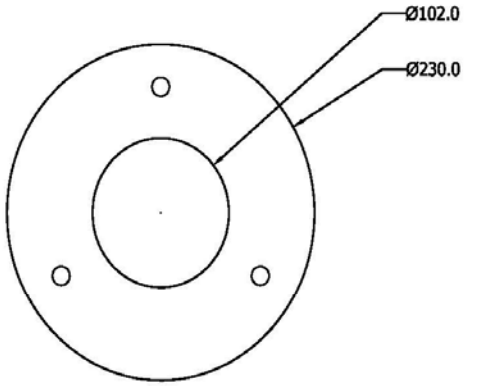

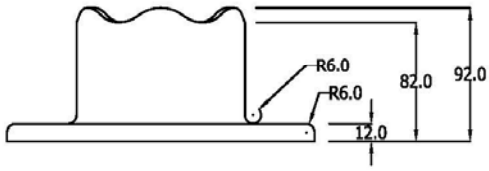

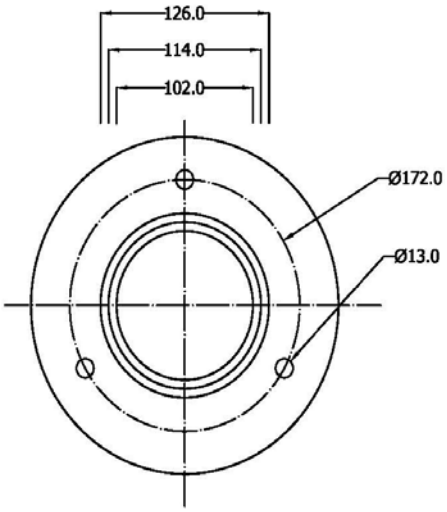

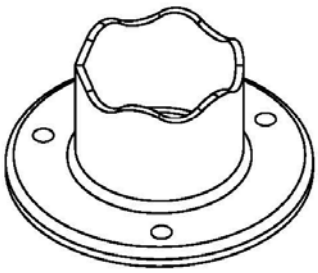

Tolerance:±5
Aluminium alloy
Unit:mm

Post anchor
LP.GJ.QT003

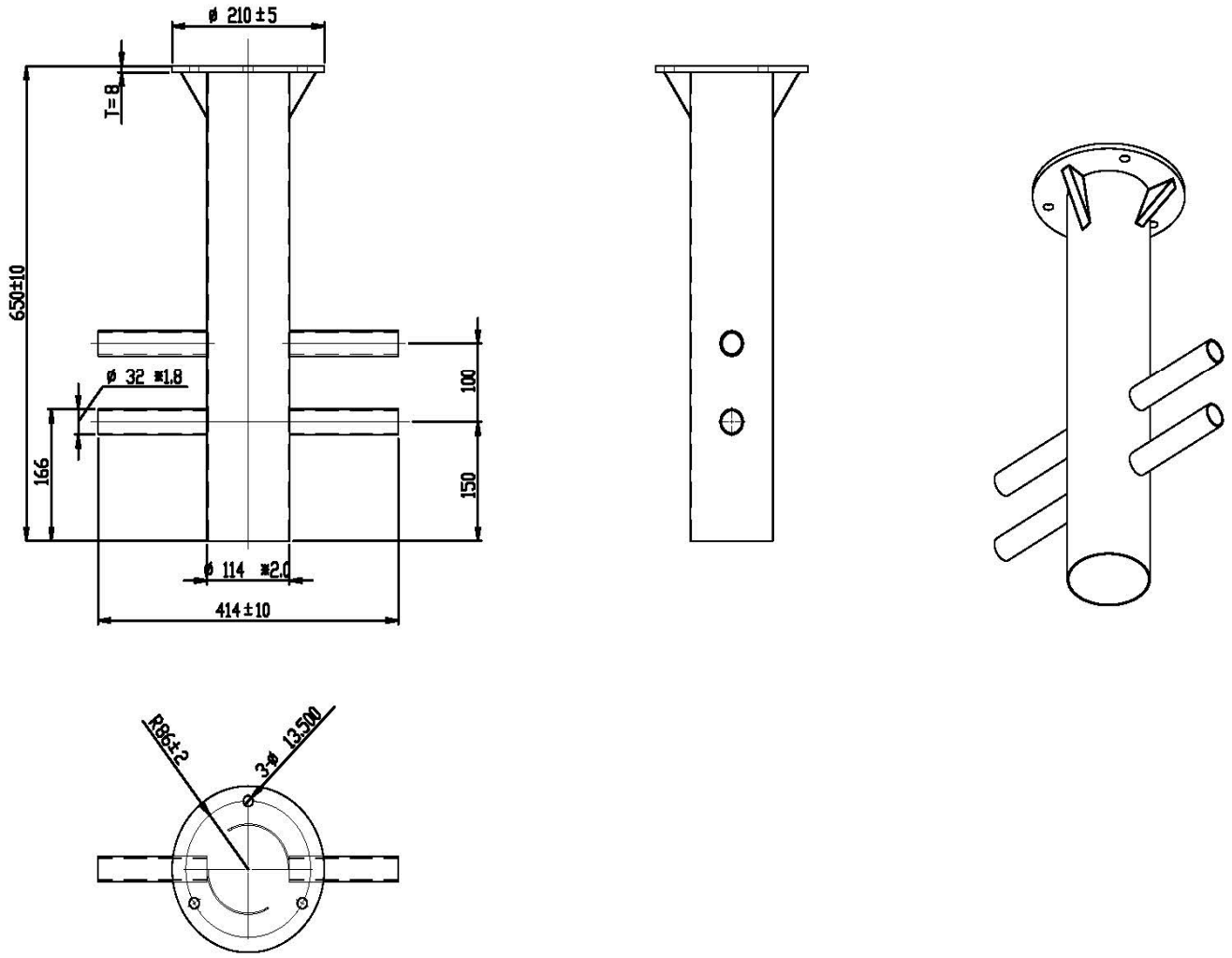

Tolerance:±5
Galvanized pipe
Unit:mm

Plastic foot plate
LC-LY002

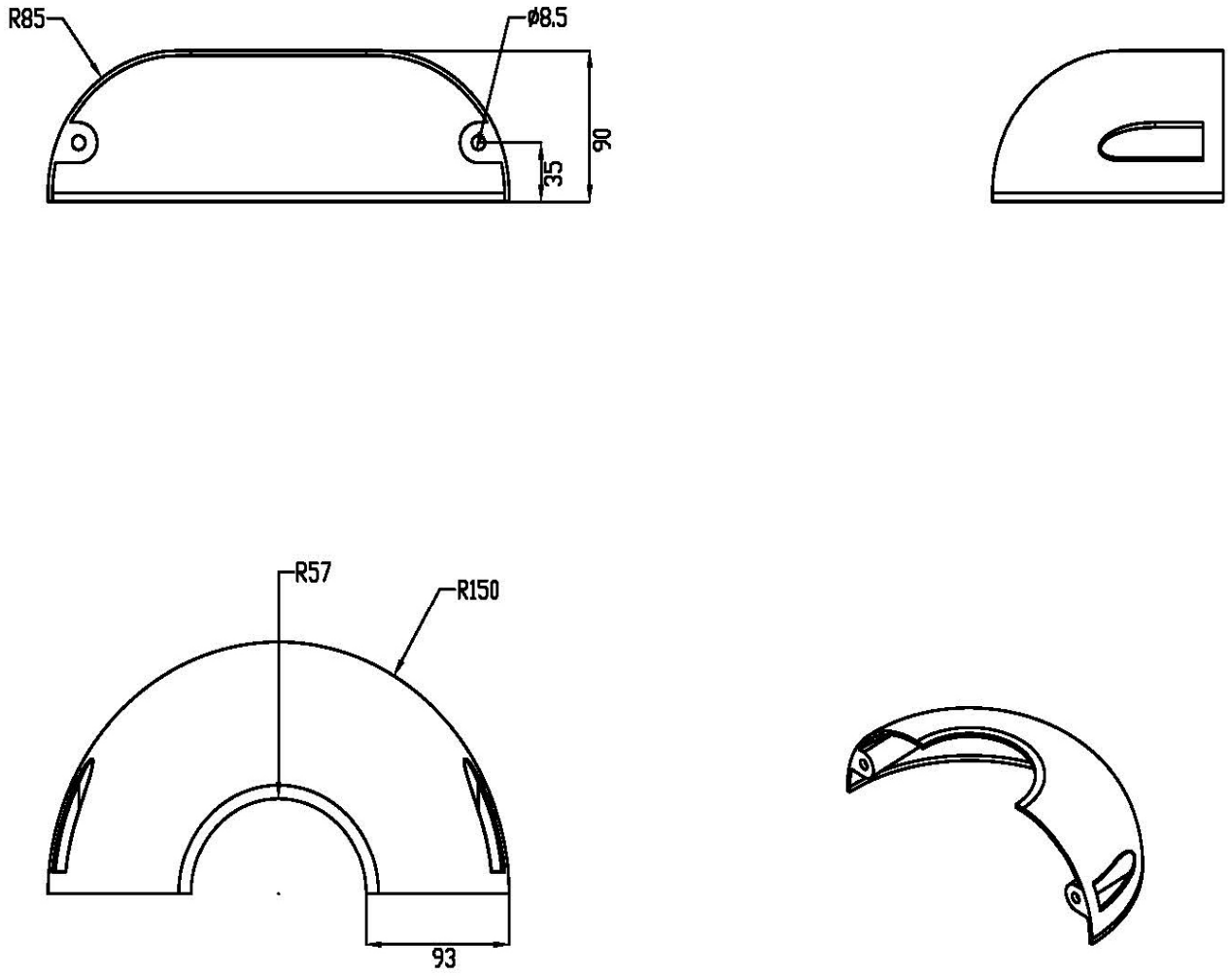

Tolerance:±5
2<Thickness <5
ABS
Unit:mm

Section 5

Foundations

Sample-01

info@everbestplayc.com
www.everbestplay.com

Fixing posts onto the ground

1. Inground Type-----Inground depth according to different types of ground.

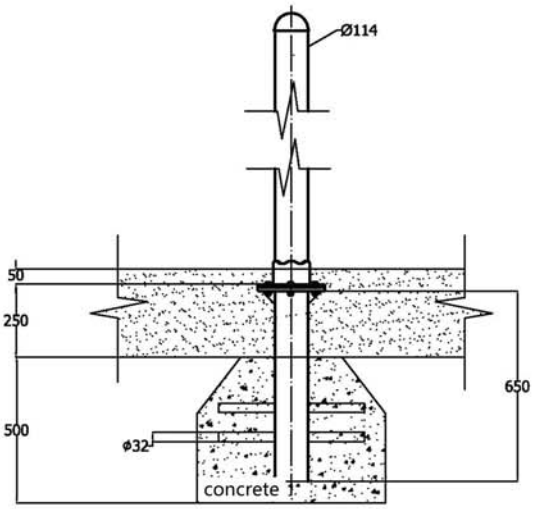

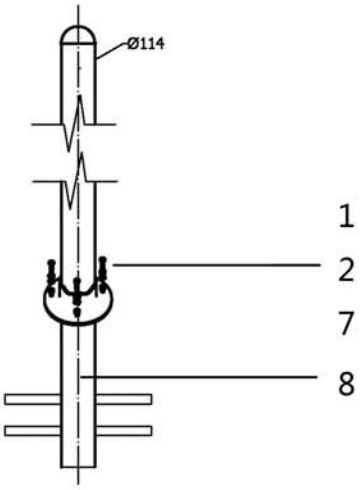

Ground surface mount using post base type

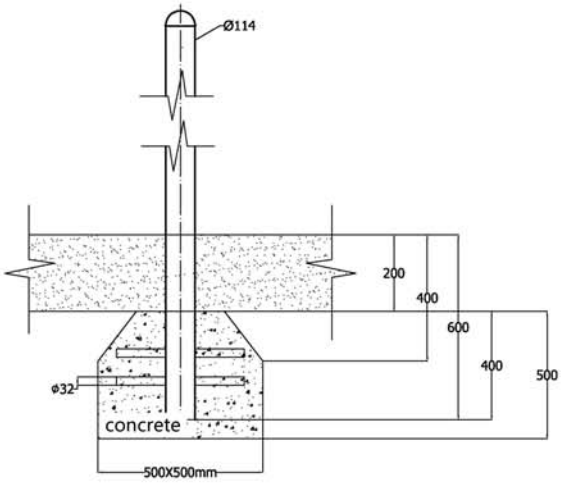

Ground surface mount type

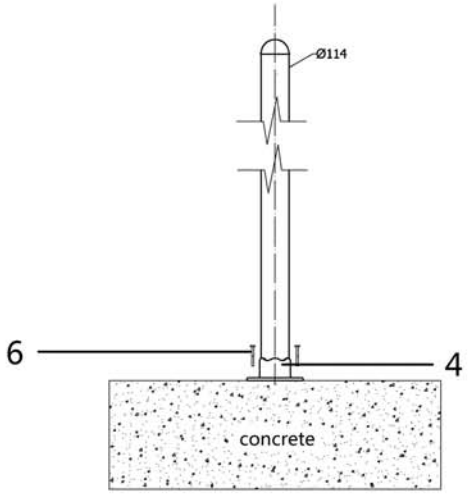

Ground surface mount type

Pic.	NO.	Name	Qty	Model Refer
	1	Hex-centered bolt M12*50	3	
	2	Lock nut M12	3	LP-BZ21
	4	114 Foot plate	1	LC-A0001
	6	Expansion bolt M10*60	3	LP-Q0052
	7	washer M10X2	9	LP-Q0029
	8	Post anchor	1	LP.GJ.QT003

Fixing Elements onto the ground

Inground Type-----Inground depth according to different types of ground.

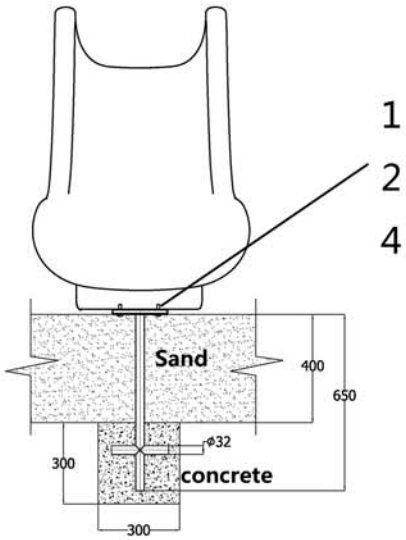

Mount slide into ground

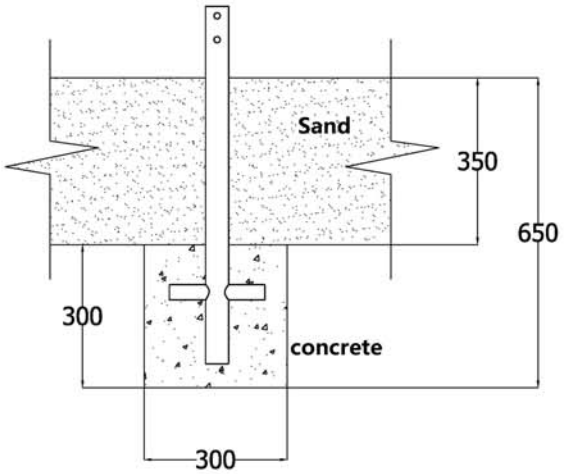

Mount elements into ground

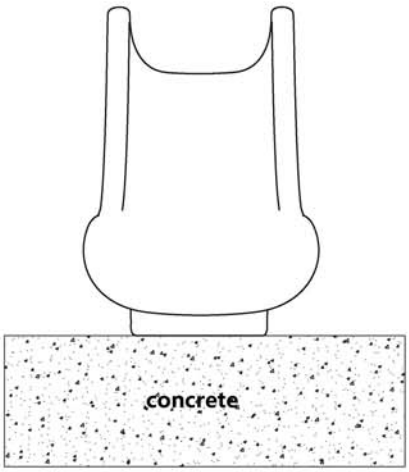

Mount slide onto concrete

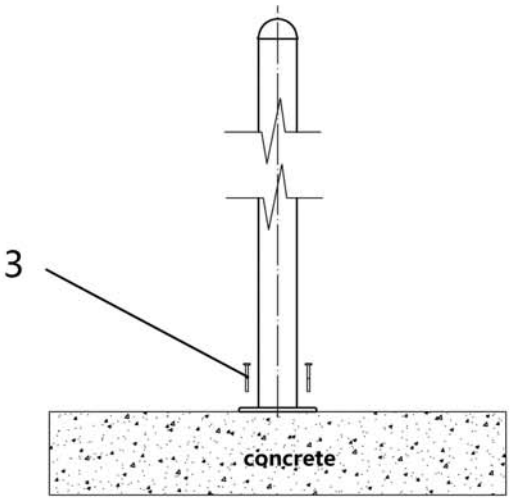

Mount elements onto concrete

Pic.	NO.	Name	Qty	Model Refer
	1	round hex-centered bolt M10*45	2	
	2	washer M10*2	2	
	3	Expansion bolt M10*60	2	
	4	Single slide anchor	1	LM-FB350-13

Section 6

Technical information

Sample-01

info@everbestplayc.com
www.everbestplay.com

Installation Instructions

(1) Please read the instructions carefully before removing the product pieces from the box in order to avoid confusing or mixing up the parts.

(2) The product requires a sizable assembly area as shown in groundplan. Based on general drawings documents, mark the installation position of the posts. See the module installation document for more detail instructions.

(3)Individually packaged parts should be marked correspondingly so as to avoid confusion.

(4) Install clamps and other small mixed fittings. To each element attached a bag with installation instruction and its fasteners, make sure not to damage installation instruction's paper.

(5) Do not mix components or parts to avoid confusion while installing.

(6) When assembling and installing the product, personnel should use care to prevent damage to parts.

(7) When installing the product, protection measures should be taken to avoid personal injury.

(8) All the clamps and fasteners should be firmly fastened to prevent loosening.

(9) To ensure children safety during play we took into consideration all danger possibilities during the design stage. Our company should not take any responsibility for all the consequences of the incorrect installation.

(10) As required by regulation, all falling areas should have sand diameter ranged from 0.2 to 2mm and the thickness not less than 300mm

(11) After the installation of the whole set of playground equipment, three things need to be done before use: first, check if there is tilting or other anomalous phenomenons. Second, make sure all the clamps and fasteners are correctly and firmly fastened. Thirdly, remove all the trashes and clean the playground.

Product Basic Information

(1)This product is outdoor playground equipment, which is composed of stainless steel parts and plastic parts.

(2)This product is suitable for outdoor public parks, and its purpose is to guide children to discover playing games. The concise style and linear design are beneficial for children to increase their interest in the product, and to let children grow up strong and happy from playing. Meanwhile, this product also enriches their imagination and creativity.

(3)This product presents a natural appearance with visual balance that blends the entire structure and surrounding environment together.

(4)This product is easy to use. Children can exercise through climbing and sliding, running and crawling. While designing it, we not only considered its functionality and practicability, but also its safety and convenience in the using.

(5)This product is made strictly according to the latest safety standards and is easy to assemble, install and maintain.

Attentions

Information on using this product

(1) In order to ensure your safety, please read the instructions carefully and patiently before using the equipment. We do not take responsibility for accident or injury caused by not following the instructions.

(2) This equipment must be used under supervision of adults for children shorter than 1.1meters in height.

(3 If any component becomes loose or falls off while using the equipment, please stop using it until repairs are made. Inform the owner or administrator to maintain the equipment to avoid dangerous consequences.

(4) The equipment belongs to the public, please take care of it.

(5) The purpose of this equipment: climb, slide, creep, walk etc.

(6) This product should only be used by children 3-12 years of age.

Attention:

(1) Children using the playground must be accompanied by adults.

(2) Check the safety device if there is a fault or danger and the rescue measures is perfect or not ,explain and remind to the child.

(3) Direct each child to select the appropriate playground equipment according to the child's physical health and strength.

(4) Do not permit children suffering from acrophobia, heart disease, or anemia to use this equipment.

(5) While using this playground equipment, do not break any of the safeguards elements which are used to protect users from injury while playing on playground, do not jump without permission or put the head, hands, or feet through the fence or handrail.

(6) If the playground equipment breaks, keep calm and do not panic, quickly sound the alarm, and follow the instructions of the adult staff members on site to get all children to safety.

(7) Do not allow children to climb over the railings or the handrails, or the top of the playground facilities during use. Do not allow children to climb or run up on the slide.

Products Maintenance

(1) On a monthly basis, clean any stains and scuff marks with a brush and moderate cleaning solution on the ladders, slides and all other parts with which users have come into direct physical contact.

(2) Please mark when doing shift assembling to avoid unnecessary trouble.

(3) If playground equipment is frequently used (either in the school or in the residential community), it should be visually checked every day and carefully inspected every month. The purchaser/owner should contact the seller every month for comprehensive inspection or replacement of components as needed. If infrequently used, the equipment should be inspected every 4 to 6 weeks for normal wear and tear damage.

(4) Weekly visual inspections should include: cleanliness, security of overhead parts, stability of the flooring, the bare ground around the equipment, any sharp edges anywhere, missing components and any fraying or damage to structural strength.

(5) The key maintenance parts include:

a. The sand /rubber layer should be checked monthly. Make sure the sand layer is even and smooth in case of any physical injuries related to falling.

b. Check to ensure screws and ropes are tightened and all moving parts are sufficiently lubricated. If needed, remember the components' model number and replace them in time to avoid injury to users.

c. Make sure the drainage hole on the platform is clean and draining normally.

(6) Replace all frayed or worn parts in time to avoid injury to children.

(7) If the whole element becomes completely unusable, dismantle it completely and replace it. Damaged Iron accessories and screws can be dangerous and cause a bad injury to kids.

(8) Inspect the drainage system, especially after several years of use, to ensure drainage is still good. This is especially true if the equipment has been submerged under water for any length of time, as this will shorten the service life of the equipment.

Product storage information

The products are shipped in bulk and packed with cotton and bubble plastic wrapping for safe and convenient transport. Use care during transport, to avoid breaking the equipments. Store the equipments in a dry, dark and well-ventilated area to avoid damage due to heat and moisture.

Product obsolesoence

Proper storage, use and maintenance will extend the life of the product by up to ten years. When the equipment reaches its mandatory retirement age, it should be thoroughly dismantled and destroyed by professional personnels in case of any physical injuries. Recycling is not allowed. The demolished playground should be cleaned and rearranged to meet the safety standards.